# Virtual Area Storage Networks and Secure Fabric Routing

## Enabling Fabric Provisioning and Consolidation

**Ravindra Neelakant**

**Cisco Systems Co**

**170 W Tasman Dr, San Jose CA 95134-1706**

**Phone: +1-408-853-3863, FAX: +1-408-853-4818**

**E-mail: ravijn@cisco.com**

**Presented at the THIC Meeting at the Sony Auditorium, 3300 Zanker Rd, San Jose CA 95134-1940**

**April 19-20, 2005**

THIC Inc. The Premier Advanced Recording Technology Forum

Cisco Systems

Cisco.com

# Virtual Storage Area Networks & Secure Fabric Routing

## *Enabling Fabric Provisioning and Consolidation*

***Ravindra Neelakant***
***Sr. Technical Marketing Engineer***
***Storage Business Unit***
***Cisco Systems Inc.***
***ravijn@cisco.com***


© 2001, Cisco Systems, Inc. All rights reserved.

# Agenda



- Fabric Virtualization
  - Cisco's Virtual SANs
- Fabric Routing
  - Cisco's Inter-VSAN Routing
- Securing the Solution


© 2001, Cisco Systems, Inc. All rights reserved.

# Fabric Virtualization and Fabric Routing



- Three Key Concepts
  - <u>Fabric Virtualization</u>
    Provide independent or 'virtual' fabric services on a single physical switch
  - <u>Fabric Routing</u>
    Ability to provide selected connectivity between virtual fabrics without merging them
  - <u>Virtual Fabric Trunking</u>
    Ability to transport multiple virtual fabrics over a single ISL or common group of ISLs


© 2001, Cisco Systems, Inc. All rights reserved.

# Fabric Virtualization


© 2001, Cisco Systems, Inc. All rights reserved.

# Storage Networking Evolution

Cisco.com

Homogenous "SAN Islands" → Intelligent Storage Network → "Any-to-Any" Access

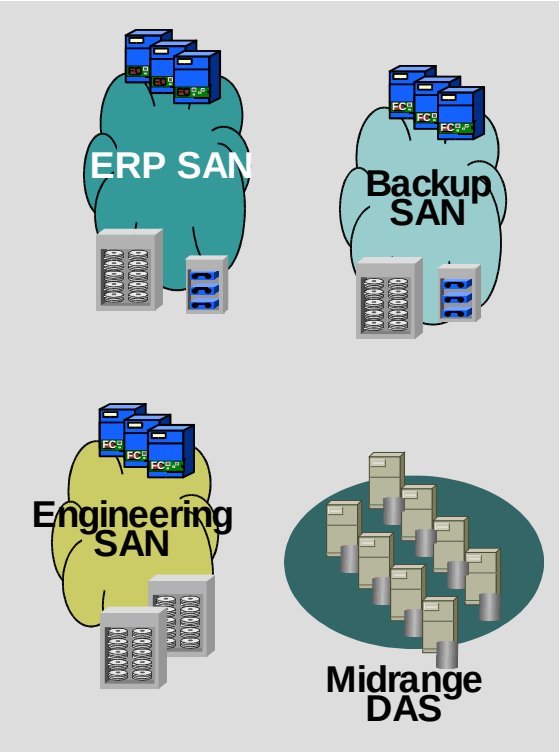


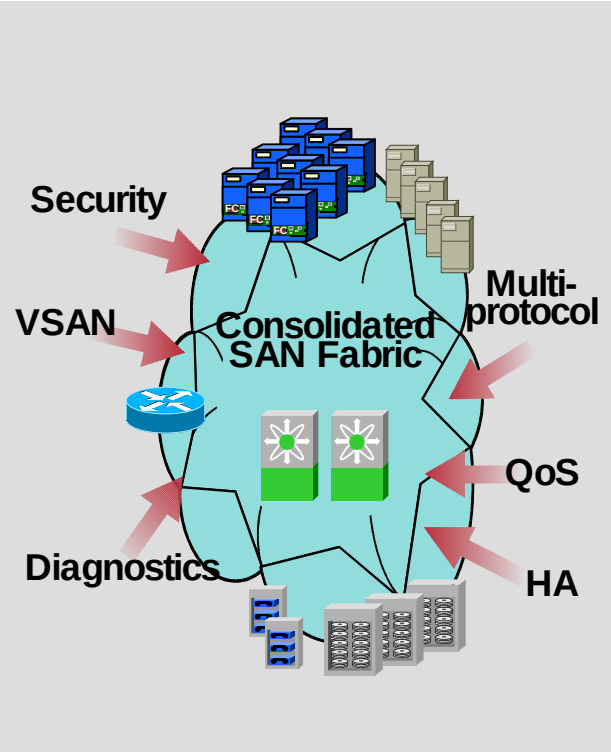


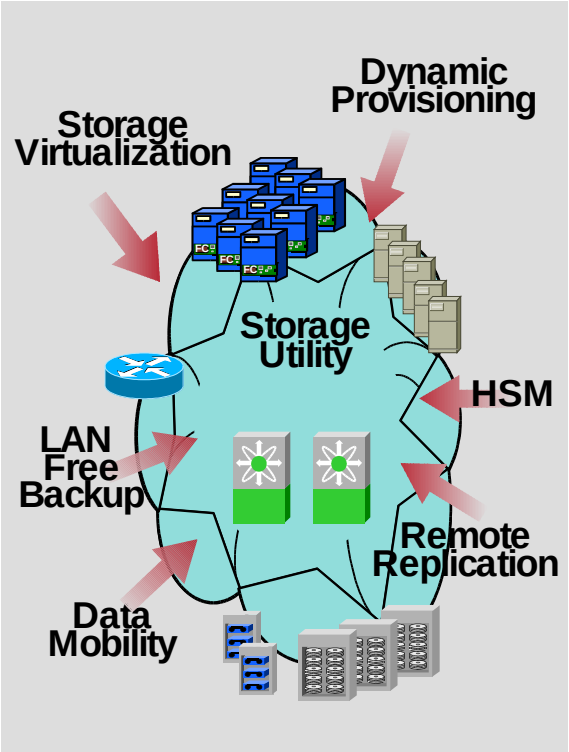



© 2001, Cisco Systems, Inc. All rights reserved.

# SAN Islands Have Purpose – At a Cost



- SAN islands are built to address several technical *and* non-technical issues:
  - Maintains isolation from fabric events or configuration errors
  - Provides isolated and controlled management of island infrastructure
  - Driven by bad experiences of large multi-switch fabrics

However . . .

- Often over-provisioned port count for future growth – wasteful and costly
- Very widespread issue today – some architects still recommending islands

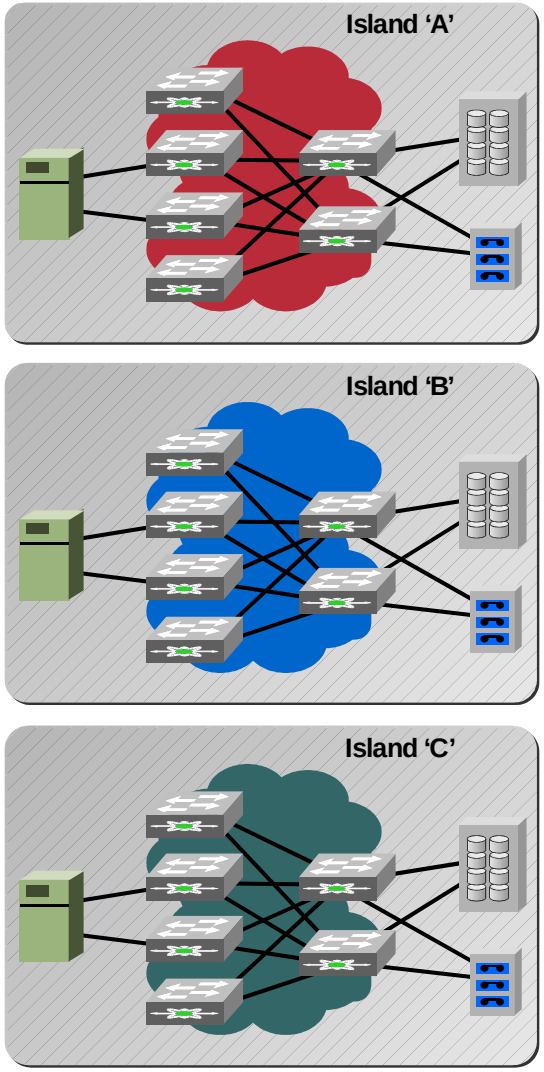



© 2001, Cisco Systems, Inc. All rights reserved.

# Introducing Fabric Virtualization

Cisco.com

**Fabric Virtualization provides:**

- A method to divide a common physical fabric into virtual domains
- An infrastructure analogous to VLANs in the Ethernet world
- A method to still isolate virtual fabrics from one another for
  - High availability
  - Security
  - Management
- A method to reduce wasted ports as experienced in the island approach
- A method to charge-back for used resources from the physical fabric

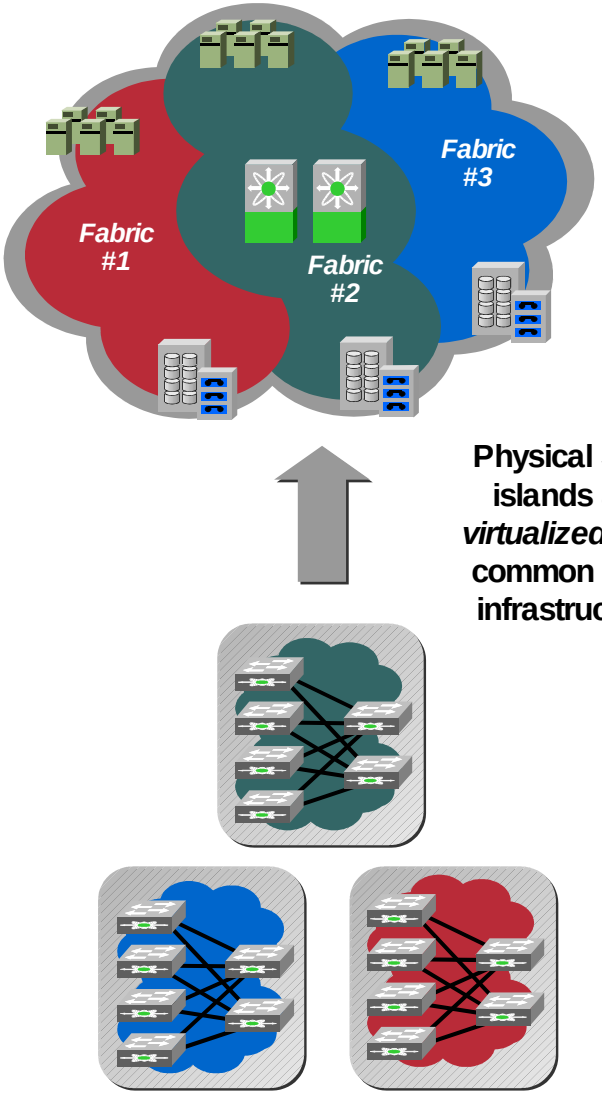



© 2001, Cisco Systems, Inc. All rights reserved.

# Uses For Fabric Virtualization

## *Consolidating SAN Islands - Creating a Fabric Utility*



- Virtual fabrics support the need to consolidate numerous SAN islands
- Fabrics can be migrated from physical to virtual implementations
- New fabrics are provisioned through switch commands, not physical adds, moves, changes
- Fabrics are provisioned as a service with exact # of ports required without over provisioning

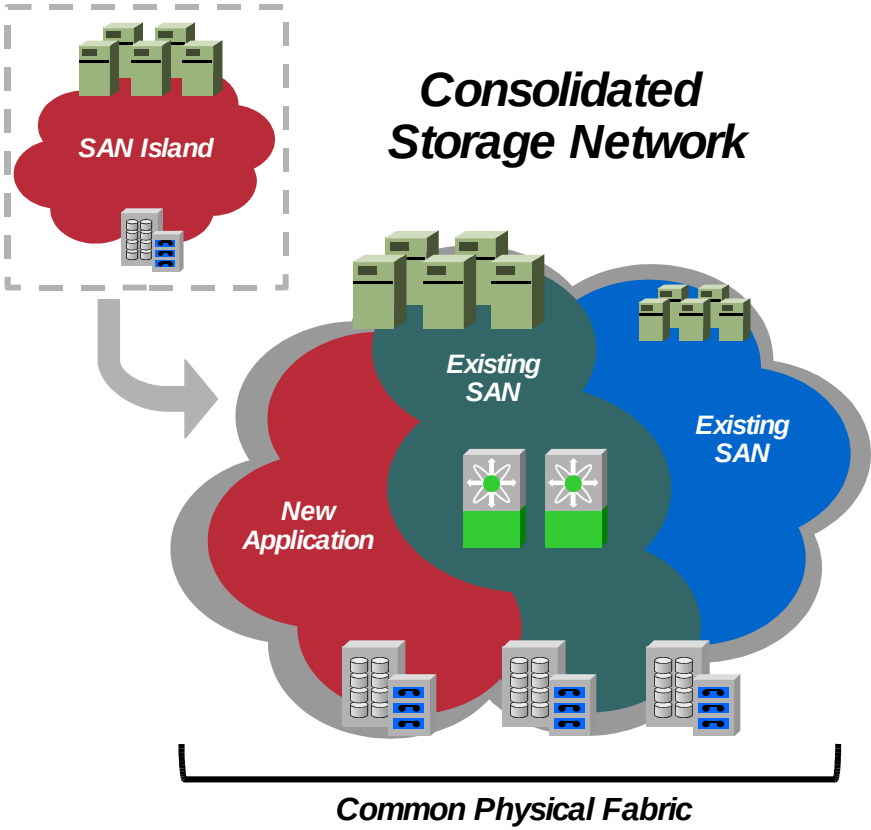



© 2001, Cisco Systems, Inc. All rights reserved.

# Uses For Fabric Virtualization

## *Cost-Effective Departmental or OS-Specific SANs*



- Virtual fabrics enable provisioning of numerous purpose-specific fabrics
  - No new physical infrastructure
- Keep OS's separated more securely without zoning
- Keep fabric-specific events (eg. LUN discovery) isolated
- Grow and shrink fabrics dynamically and without impact to other fabrics

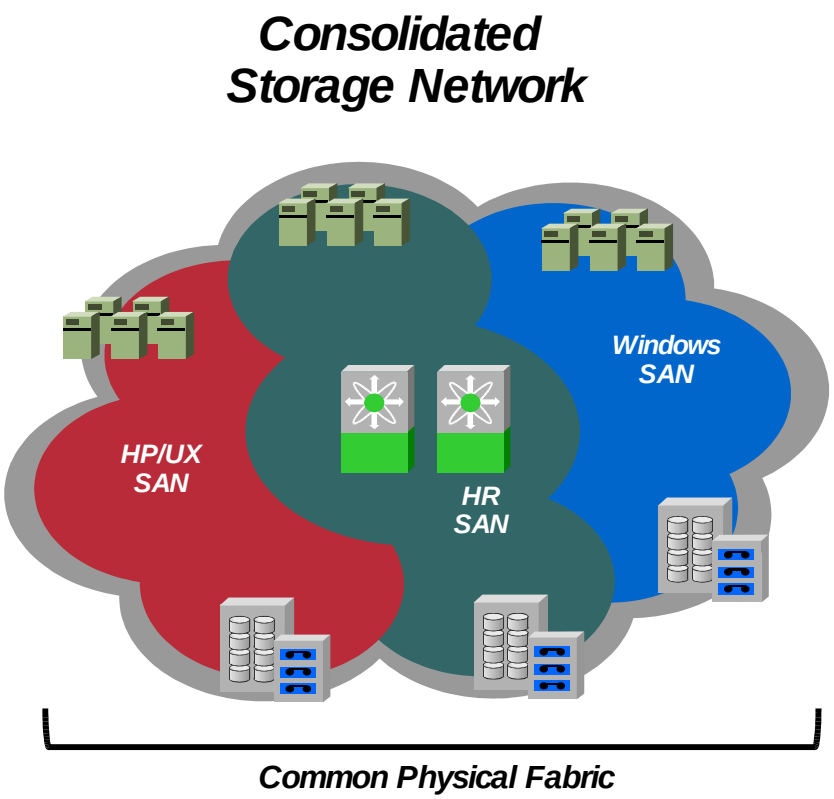



© 2001, Cisco Systems, Inc. All rights reserved.

# Uses For Fabric Virtualization

## *Cost-Effective Development, Staging, Backup SANs*

Cisco.com

- Instead of building separate physical development fabric, build a virtual one
  - Migrate to existing fabric later
  - Use free ports in larger SAN
- Build a virtual tape backup SAN
  - Can be expanded using routing to share tape resources
- Build a staging SAN for new applications or servers
  - Test stability in isolated staging virtual fabric before adding into larger SAN

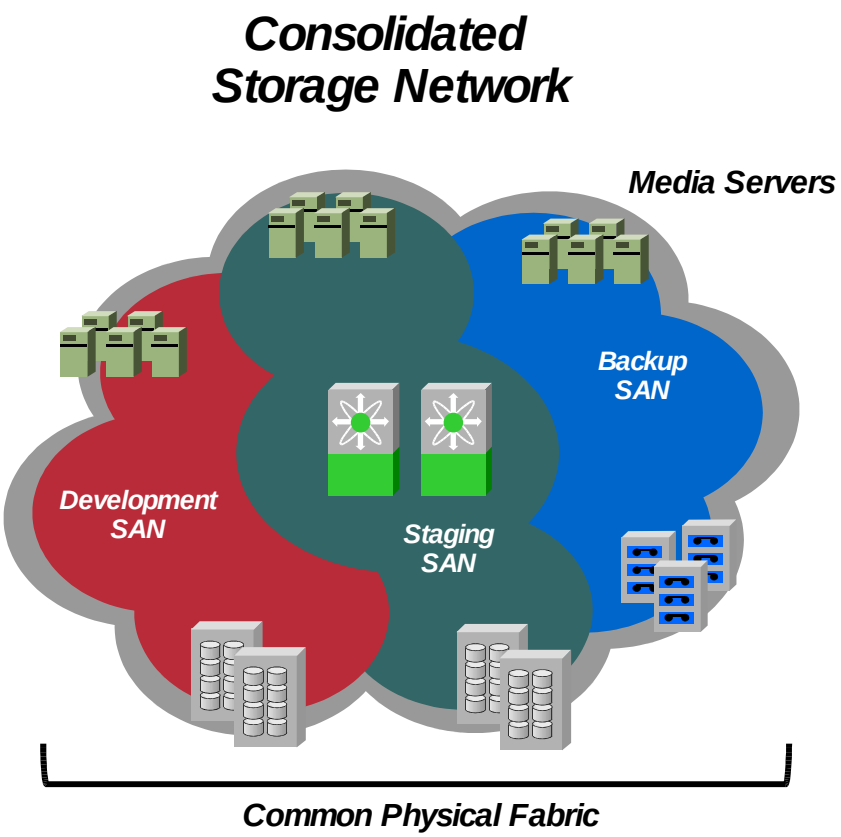



© 2001, Cisco Systems, Inc. All rights reserved.

# Uses For Fabric Virtualization

## *Cost-Effective SAN Extension Integration*



- Overlay data replication fabric(s) on common physical fabric
  - No need for separate pair of switches for each replication connection
  - Use one virtual fabric per replication connection
- A *bonus* is to be able to share common SAN extension circuits amongst multiple virtual fabrics
- Fabric routing adds to resiliency of solution

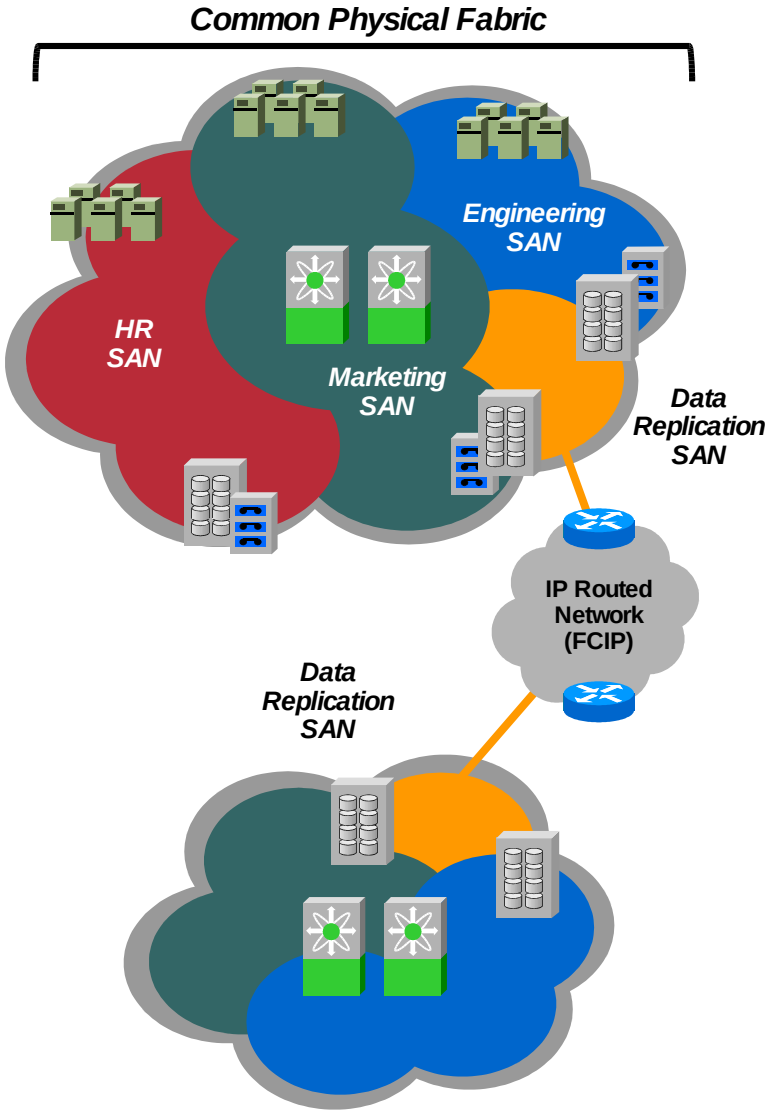



© 2001, Cisco Systems, Inc. All rights reserved.

# Fabric Virtualization – The Full Solution



**To build a cost saving fabric virtualization solution, 7 key services are required:**

- **Virtual Fabric Attachment – the ability to assign virtual fabric membership - preferably port-level**
- **Multiprotocol Extensions – the ability to extend virtual fabric service to iSCSI, FCIP, FICON, etc.**
- **Virtual Fabric Services – the ability to create fabric services per virtual fabric (routing, zones, RSCNs, QoS, etc.)**
- **Virtual Fabric Diagnostics – the ability to troubleshoot per virtual fabric problems**
- **Virtual Fabric Security – the ability to define separate security policies per virtual fabric**
- **Virtual Fabric Management – the ability to map and manage virtual fabrics independently**
- **Inter-Fabric Routing – the ability to provide connectivity across virtual fabrics – *without merging the fabrics***

**Virtual Fabric Service Model**

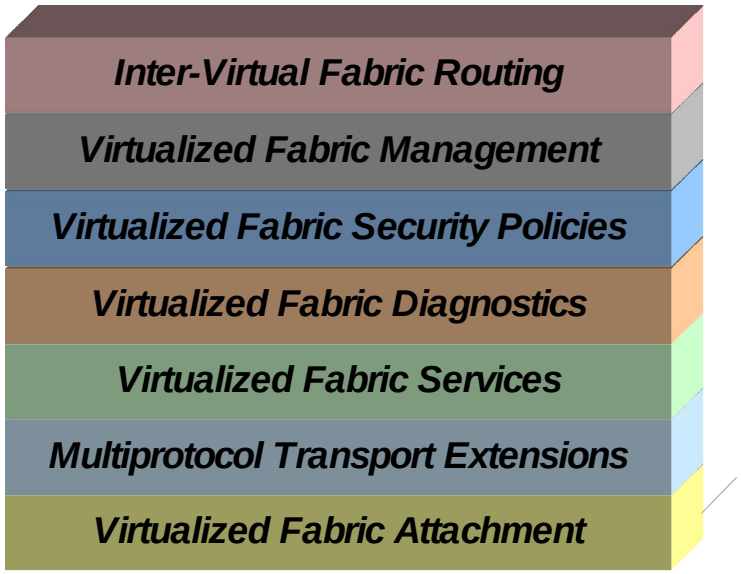



© 2001, Cisco Systems, Inc. All rights reserved.

# Three Approaches to Fabric Virtualization

Cisco.com

### *Switch-Based*

- Switch line-card partitioning
- Island-level granularity
- No shared ISLs
- Interconnection, but no consolidation

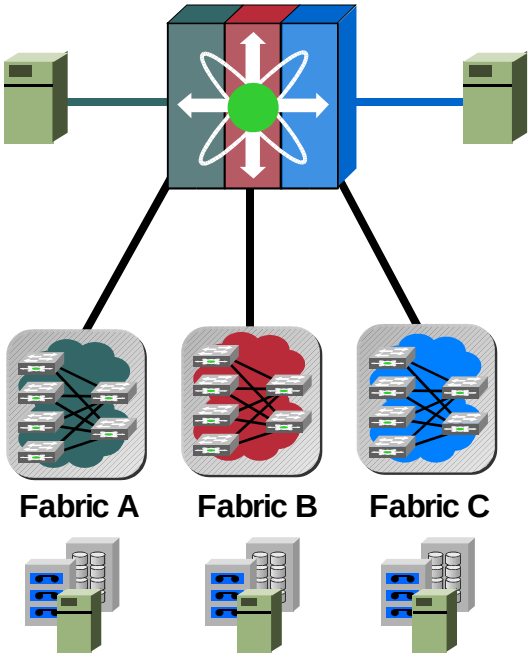


### *Appliance-Based*

- Dedicated appliance provides routing
- Island-level granularity
- No shared ISLs
- Interconnection, but no consolidation

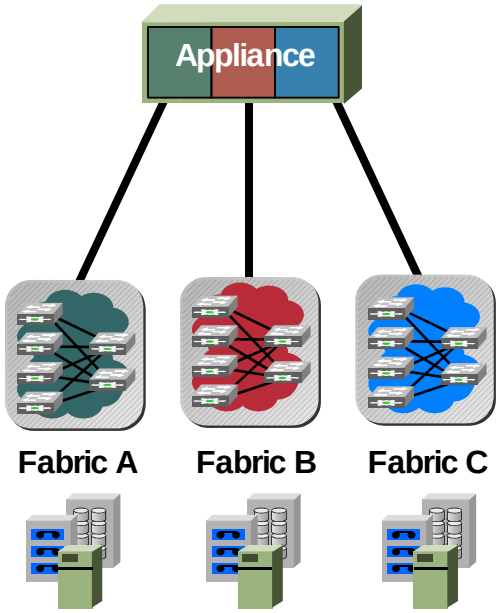


### *Fabric-Based*

- Fabric-wide virtualization via hardware partitioning
- Port-level granularity
- Fully shared ISLs
- Drives consolidation

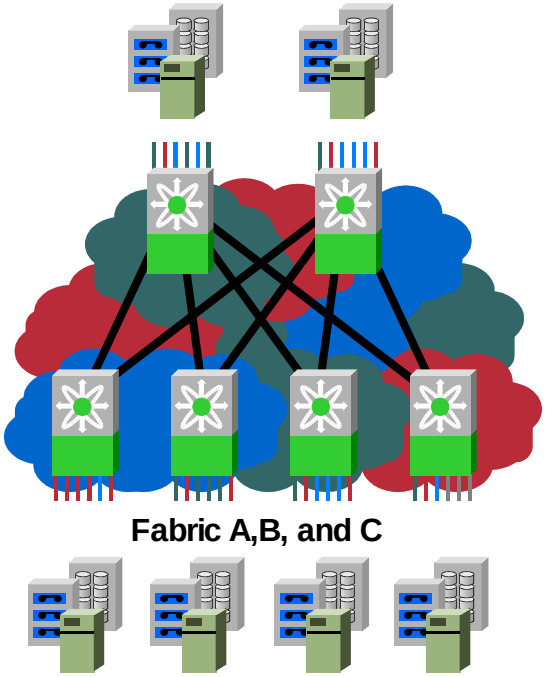



© 2001, Cisco Systems, Inc. All rights reserved.

# Cisco's Approach to Fabric Virtualization

## *Introducing Virtual SANs (VSANs)*

Cisco.com

- A VSAN provides a method to allocate ports within a physical fabric to create *virtual fabrics*
- Analogous to VLANs in Ethernet
- Virtual fabrics created from larger cost-effective physical fabric
- Reduces wasted ports with islands
- Fabric events are isolated per VSAN – maintains HA (ie. RSCNs)
- Hardware-based isolation - traffic is explicitly tagged across ISLs with VSAN membership info
- Statistics gathered per VSAN

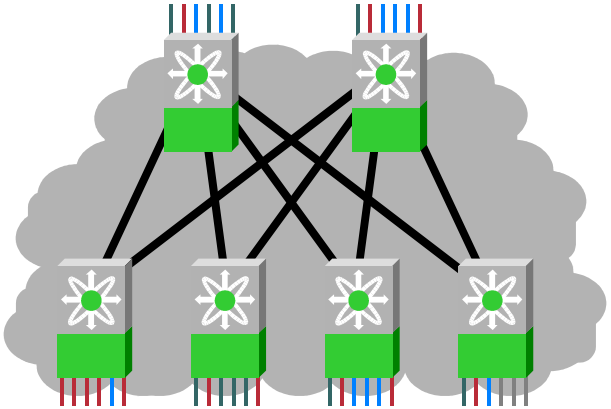

Cisco MDS 9000
Family with VSAN Service

Physical SAN islands are *virtualized* onto common SAN infrastructure

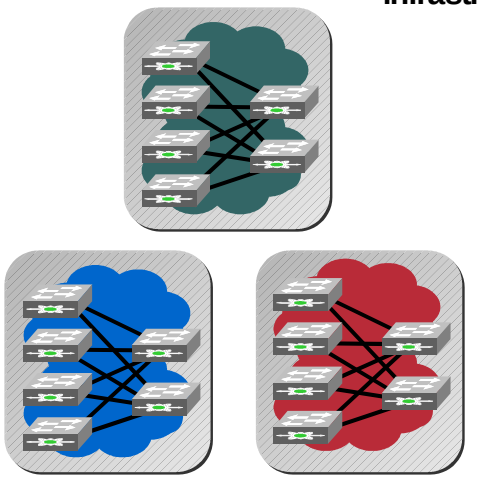


© 2001, Cisco Systems, Inc. All rights reserved.

# Fabric Virtualization - MDS 9000 Family



- Each port on the MDS 9000 Family exists in a VSAN
- Up to 256 VSANs in a single switch (hardware can support up to 4095)
- Logical configuration to move a port from one fabric to another
- WWN-based VSANs can provide automated VSAN membership
- Basis for Virtual Fabric Trunking (VFT) Extended Header (ANSI T11 FC-FS-2 section 10.3)



© 2001, Cisco Systems, Inc. All rights reserved.

# VSANs + FCIP for WAN Cost Savings



- Cost savings from multi-application SAN extension consolidation
- Multiple VSANs carried securely over Port Channeled FCIP links
- VSANs can be scaled and provisioned independently of FCIP and WAN link provisioning

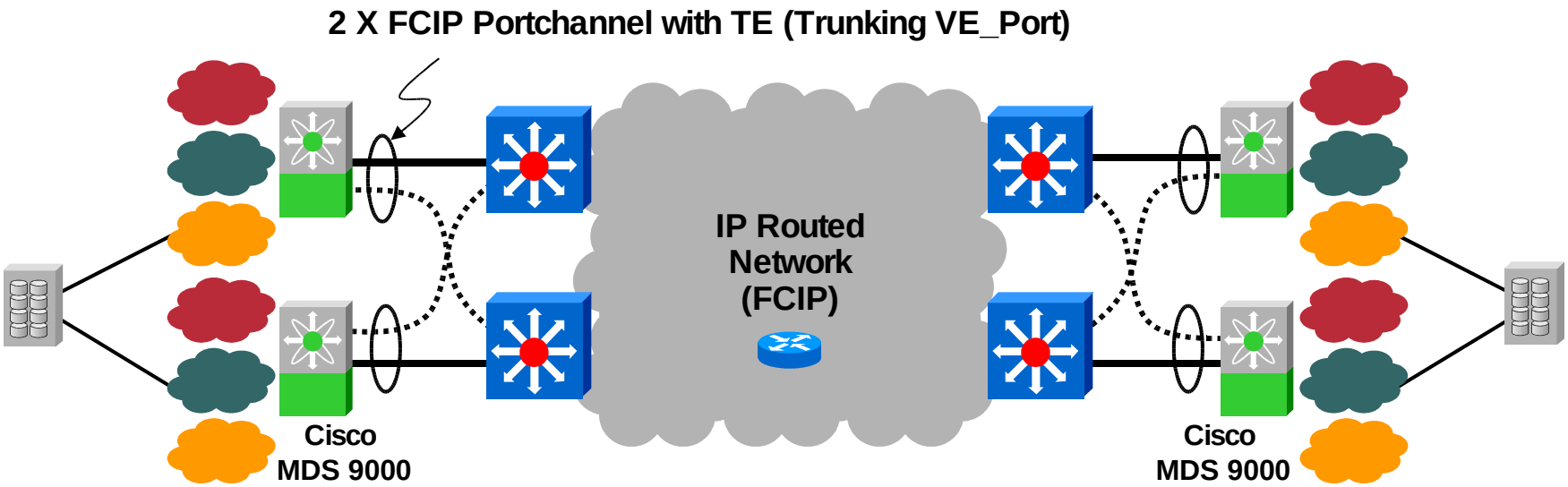



© 2001, Cisco Systems, Inc. All rights reserved.

# VSANs + iSCSI for Added Flexibility

Cisco.com

- VSANs are extended to iSCSI through intelligent mapping
- Transparent mapping mimics Fibre Channel attachment
  - iSCSI hosts discovered and displayed in Cisco Fabric Manager
  - iSCSI hosts bound to unique WWNs creating static relationship enabling :
    - iSCSI host VSAN membership
    - Zoning of iSCSI and FC devices
    - Accounting against iSCSI devices
    - iSCSI device topology mapping

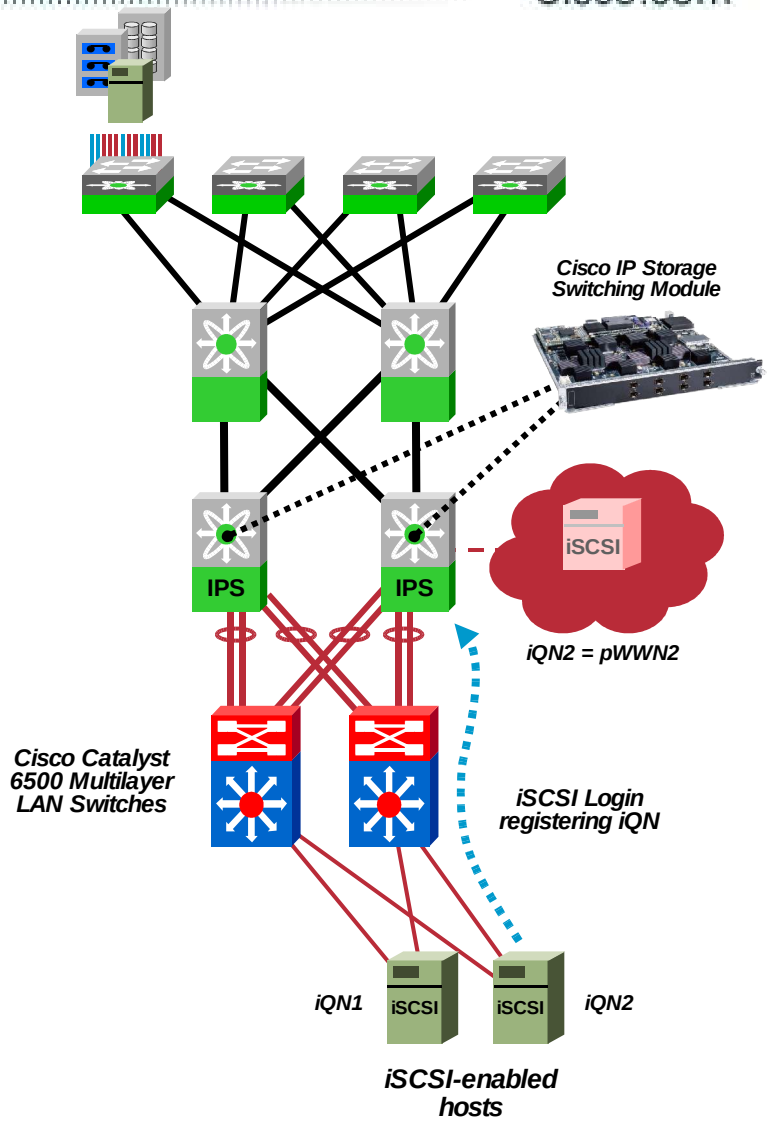



© 2001, Cisco Systems, Inc. All rights reserved.

# VSANs + FICON for Fabric Consolidation

Cisco.com

## Application / Department based SAN Islands

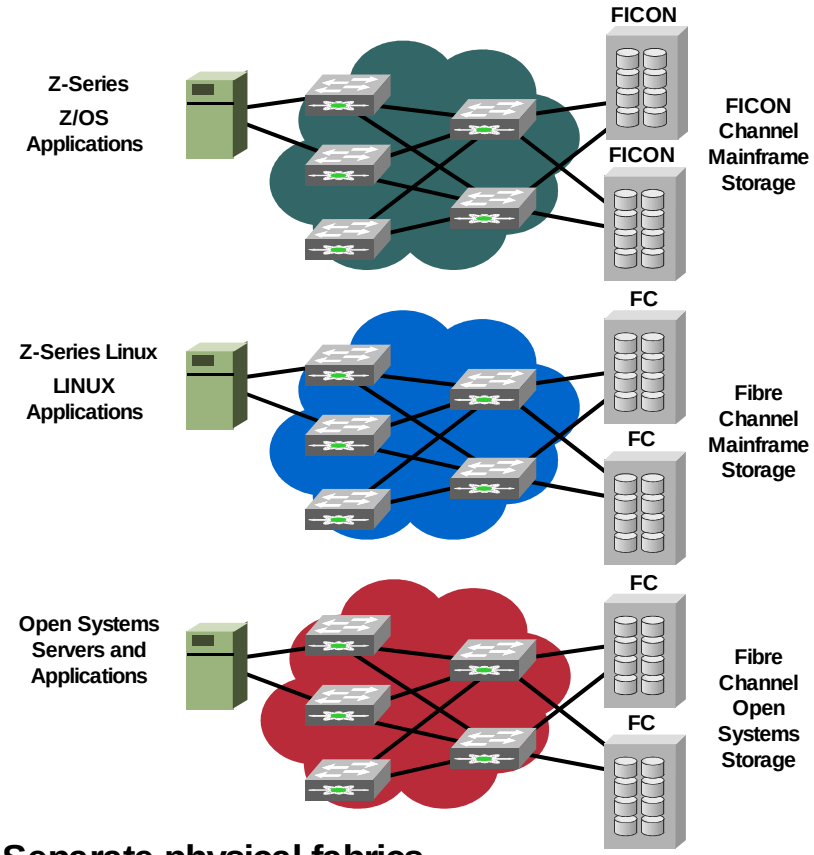


- Separate physical fabrics
- Over-provisioning ports on each island
- High number of switches to manage

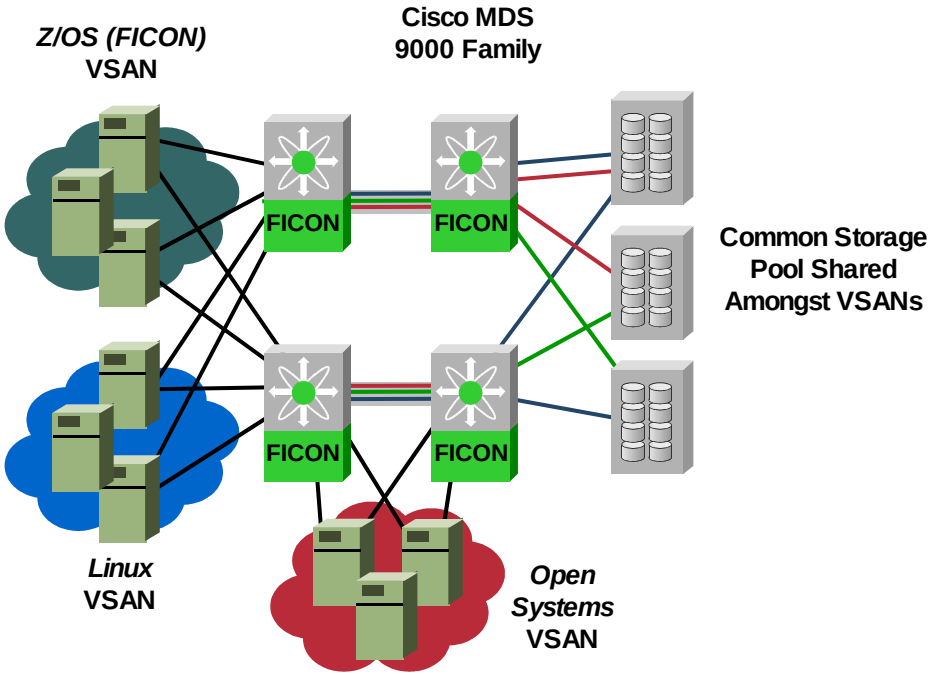


## Collapsed Fabric with VSANs

- Clean partitioning of different operating environments (FICON, Z-Series Linux-FCP, Open Systems FCP)
- Significantly more stable and manageable than current zoning+best practices approach


© 2001, Cisco Systems, Inc. All rights reserved.

# VSANs + Virtualization for Provisioning

Cisco.com

**Challenge:** Optimize storage usage while supporting heterogeneous storage

- Virtual Targets with Virtual LUNs are built from discovered physical storage
- Virtual LUNs and targets can be zoned to destined host(s)
- Separate VSAN used to isolate physical storage
- Ability to virtualize across multiple vendors' storage arrays
- Cisco working with several partners to deliver solutions

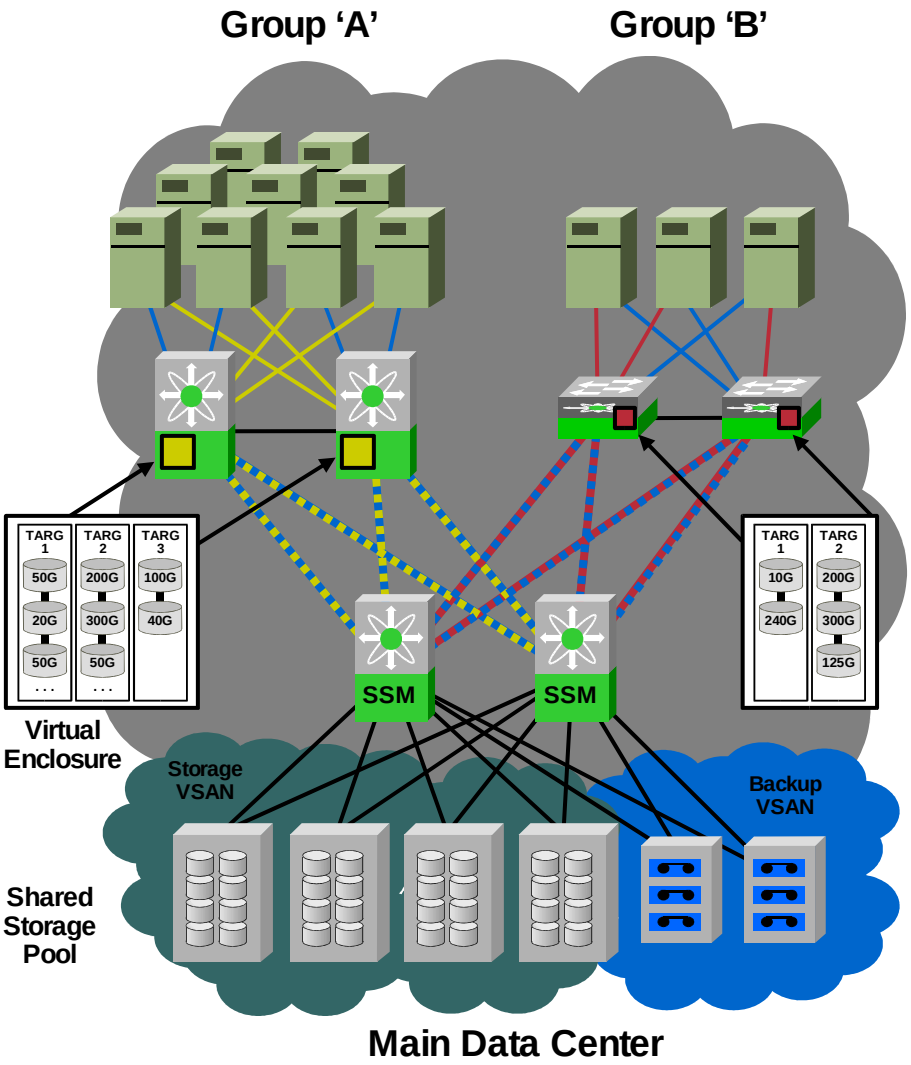



© 2001, Cisco Systems, Inc. All rights reserved.

# Fabric Routing


© 2001, Cisco Systems, Inc. All rights reserved.

# So, What About Fabric Routing?



- We use fabric as an extension of virtual fabrics to enable cross-fabric connectivity
- Done without merging the routed fabrics
  - Without propagation of irrelevant fabric events
  - Without concern for overlapping domain IDs
  - Without concern for fabric interoperability differences
- Follows in footsteps of the Ethernet world
  - Layer-3 Switching ≈ Fabric Routing

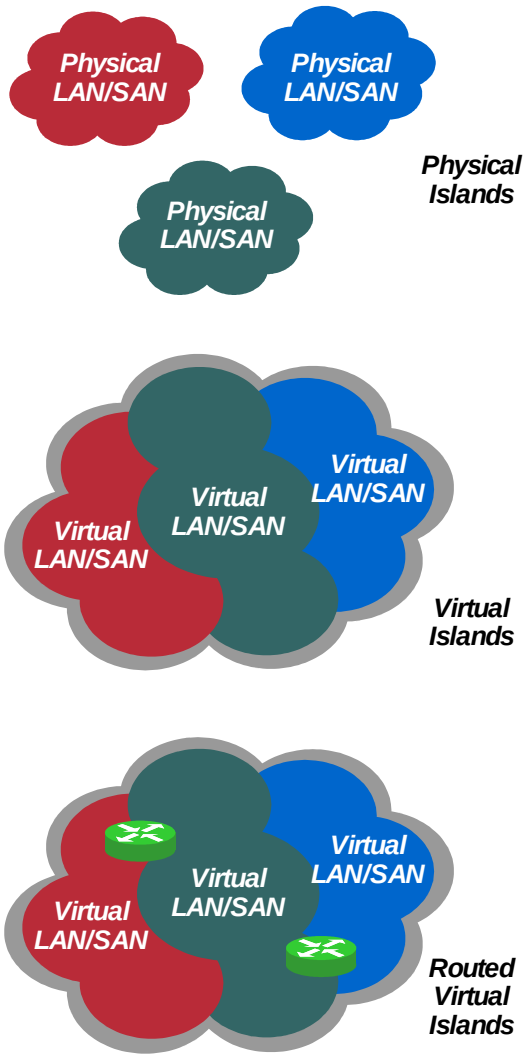



© 2001, Cisco Systems, Inc. All rights reserved.

# Uses For Fabric Routing

## *Securely Sharing Common Resource*



- Overlay data replication fabric(s) on common physical fabric
  - No need for separate pair of switches for each replication connection
  - Use one virtual fabric per replication connection
- A *bonus* is to be able to share common SAN extension circuits amongst multiple virtual fabrics
- Fabric routing adds to resiliency of solution

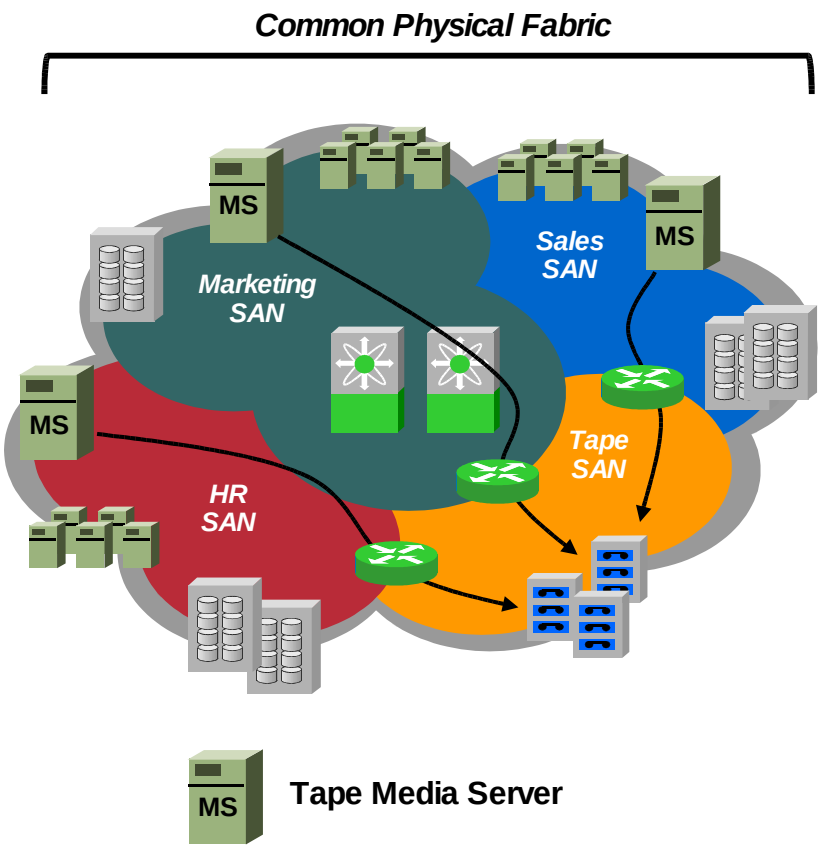



© 2001, Cisco Systems, Inc. All rights reserved.

# Uses For Fabric Routing

## *Securely Interconnecting SAN Islands*



- Fabric routing can help with interoperability issues
  - Connecting SANs of different vendors
  - Connecting SANs of different interop modes
  - Connecting SANs with overlapped Domain_IDs
- Can help with migrating from old SANs to new enterprise SANs
- Still a challenge to support
- Lots of combinations to deal with in terms of testing

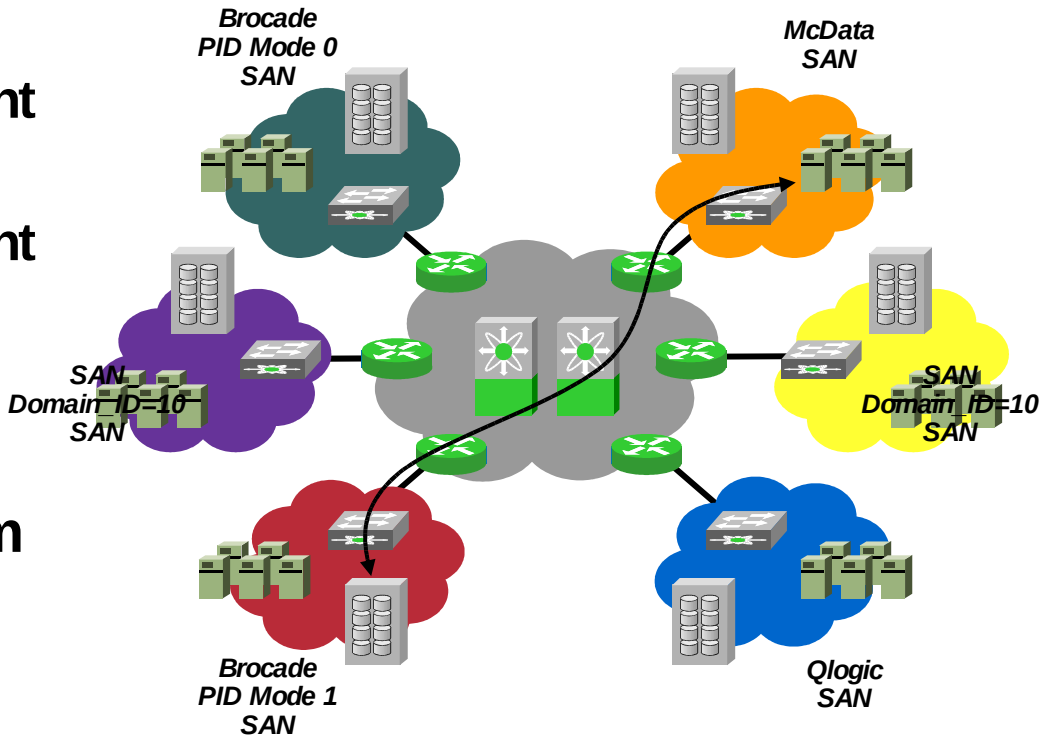



© 2001, Cisco Systems, Inc. All rights reserved.

# Uses For Fabric Routing

## *Securely Implementing SAN Extension Solutions*

Cisco.com

- Most common use for SAN routing services
- Augments the high availability of the solution
  - Filters unnecessary events
  - Isolates from remote faults
  - Enables selective visibility
- Different protocols used to implement fabric routing
- Must enable selective alerts/faults to pass
- Must work over multiple network transports

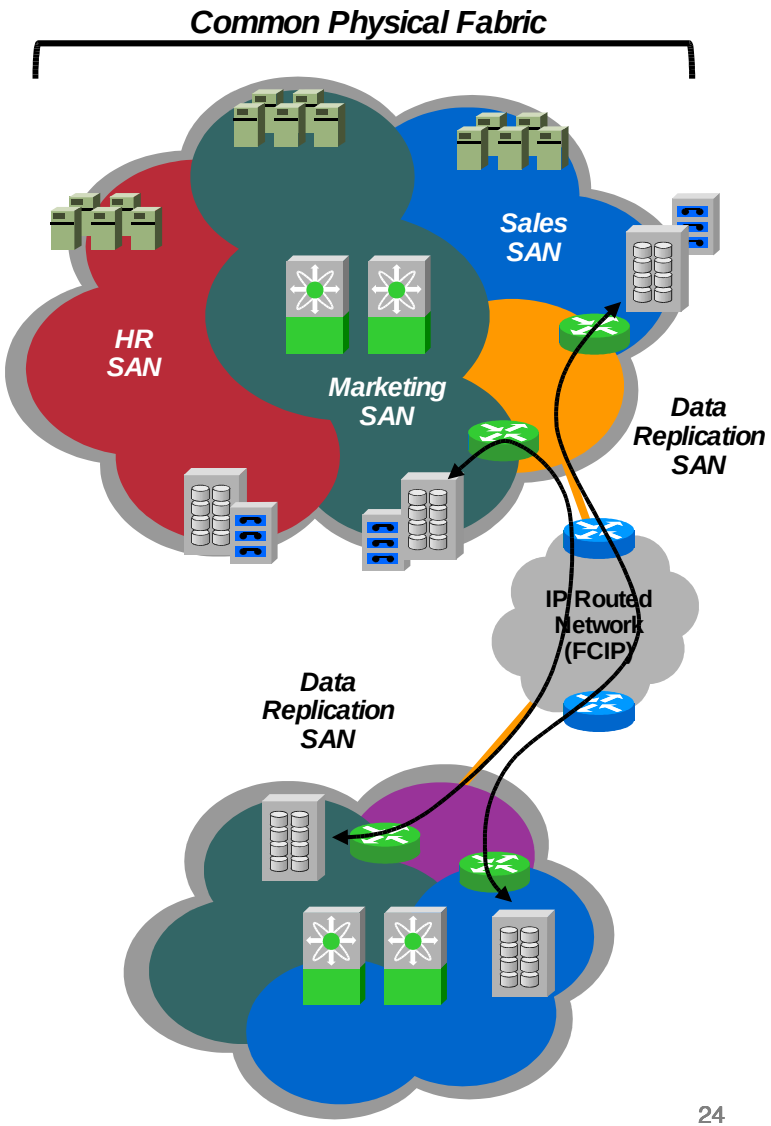



© 2001, Cisco Systems, Inc. All rights reserved.

# Two Main Approaches to Fabric Routing

Cisco.com

## *External Router*

- Dedicated fabric router connected to all fabrics
- Not typically director class - HA concerns
- Performance limited by that of appliance

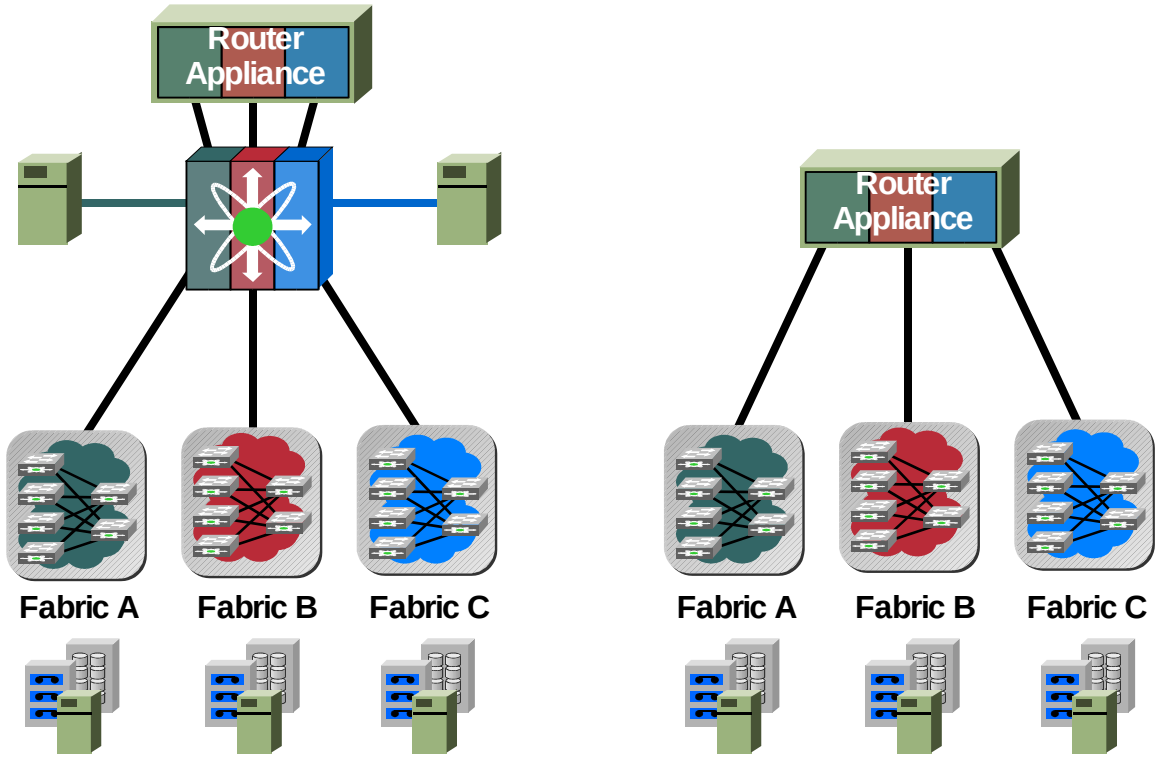


## *Embedded Routing*

- Routing enabled in switch/director hardware
- No performance penalty
- Port-level granularity

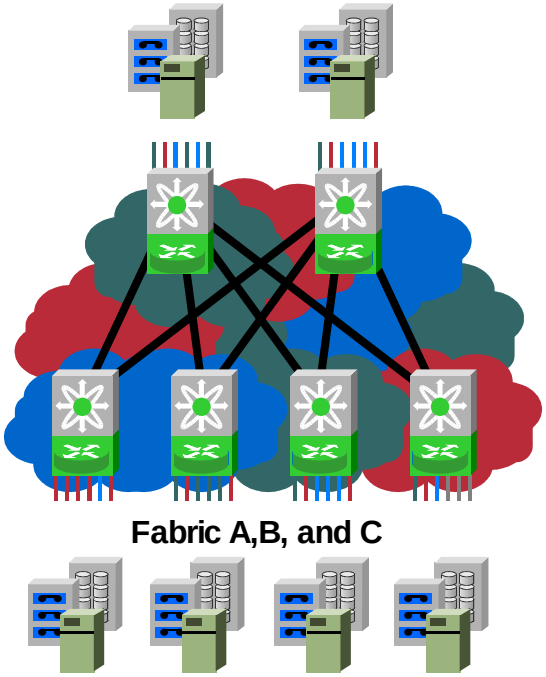



© 2001, Cisco Systems, Inc. All rights reserved.

# Cisco's Approach to Fabric Routing

## *Inter-VSAN Routing (IVR)*



- Cisco delivers fabric routing through Inter-VSAN routing (IVR)
- Embedded capability in all MDS 9000 Family switch hardware
- No need for external router
- No performance impact
- Leverages any network transport
  - Fibre Channel
  - Optical (DWDM, CWDM, SONET)
  - IP (FCIP)
- *NEW* now includes NAT services

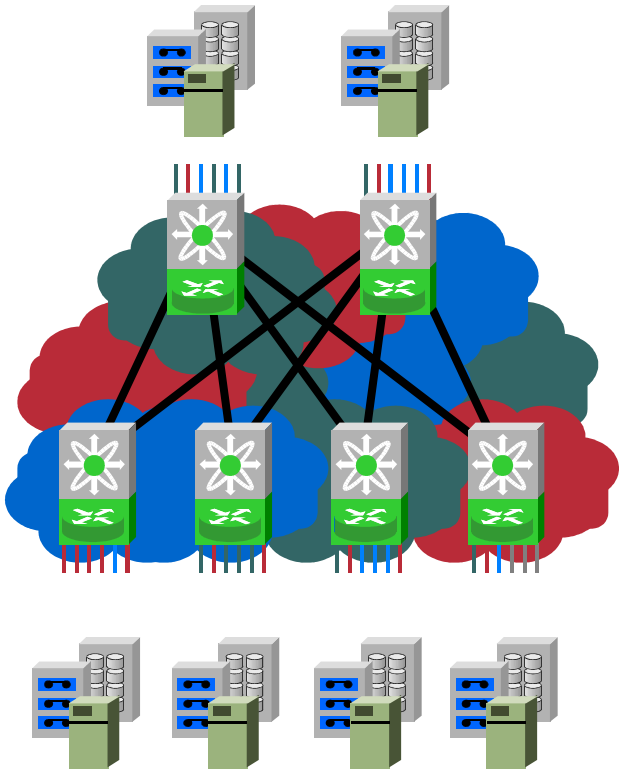


© 2001, Cisco Systems, Inc. All rights reserved.

# IVR Operation within a Single Switch

Cisco.com

- IVR enabled in any Cisco MDS 9000 Family switch using a license key
- Effectively turns any MDS 9000 Family switch into giant fabric router
- Works with all fabric interoperability modes
- Enabled through simple zone creation (wizard)

*Any Cisco MDS 9000 Family Switch*

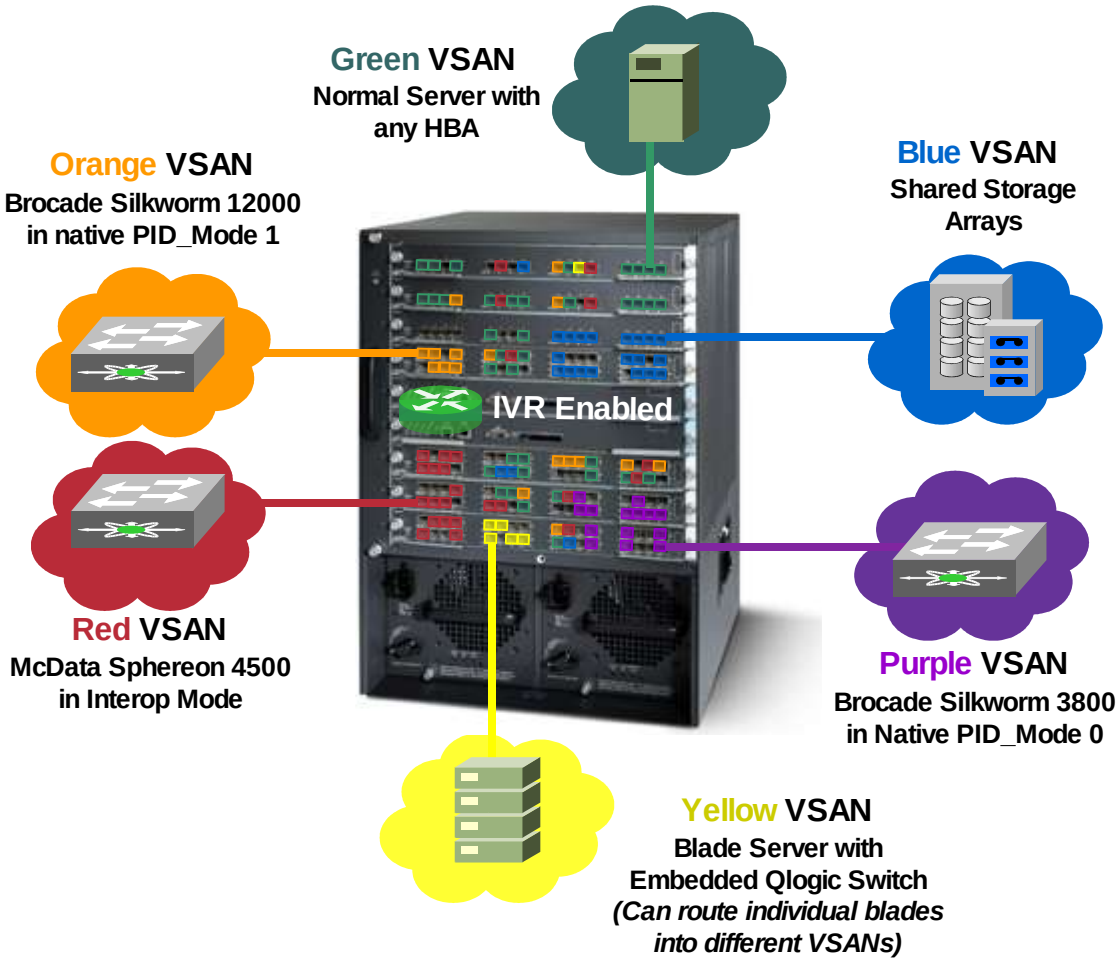



© 2001, Cisco Systems, Inc. All rights reserved.

# IVR Operation Across Multiple Switches

Cisco.com

- One or more *transit VSANs* are used to interconnect routed VSANs
- Transit VSAN can use any transport including native FC, IP (FCIP), or any optical technology - not just IP only
- Only specified devices in end VSANs are routed, not all devices in routed VSANs
- Enabled through simple zone creation (wizard)

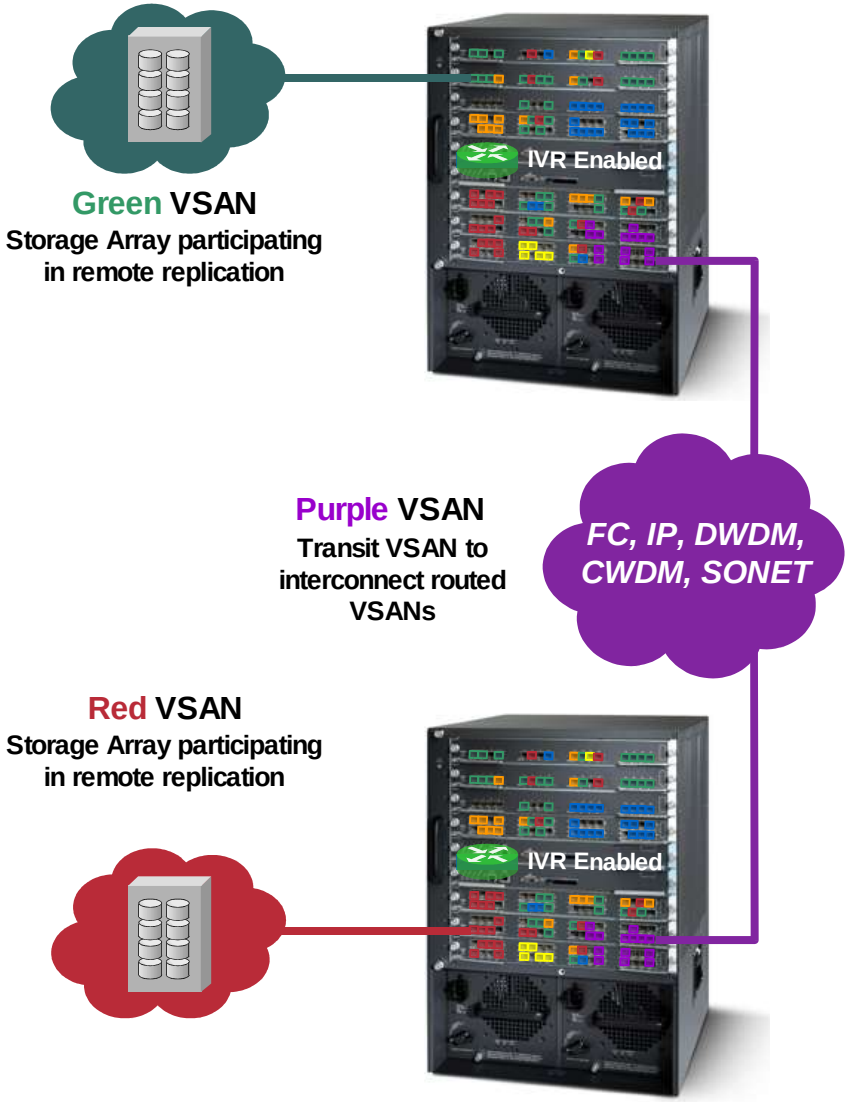



© 2001, Cisco Systems, Inc. All rights reserved.

# Inter-VSAN Routing (IVR) : Sharing Resources Across VSANs

Cisco.com

- Allows sharing of centralized storage services such as tape libraries and disks across VSANs – without merging separate fabrics (VSANs)
- Provides high fabric resiliency and VSAN-based manageability
  - Works for all MDS 9000 switches with a software upgrade to SAN-OS 1.3(1)
  - Distributed, scaleable, and highly resilient architecture
  - Transparent to third-party switches
- Enables blade-per-VSAN architecture for blade servers

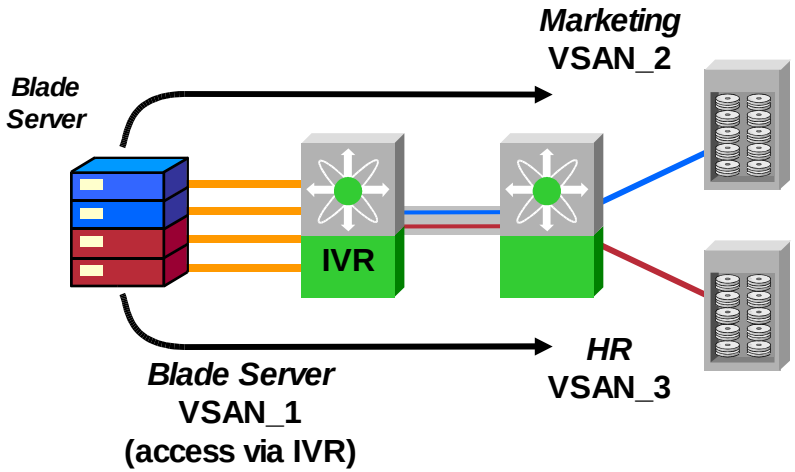


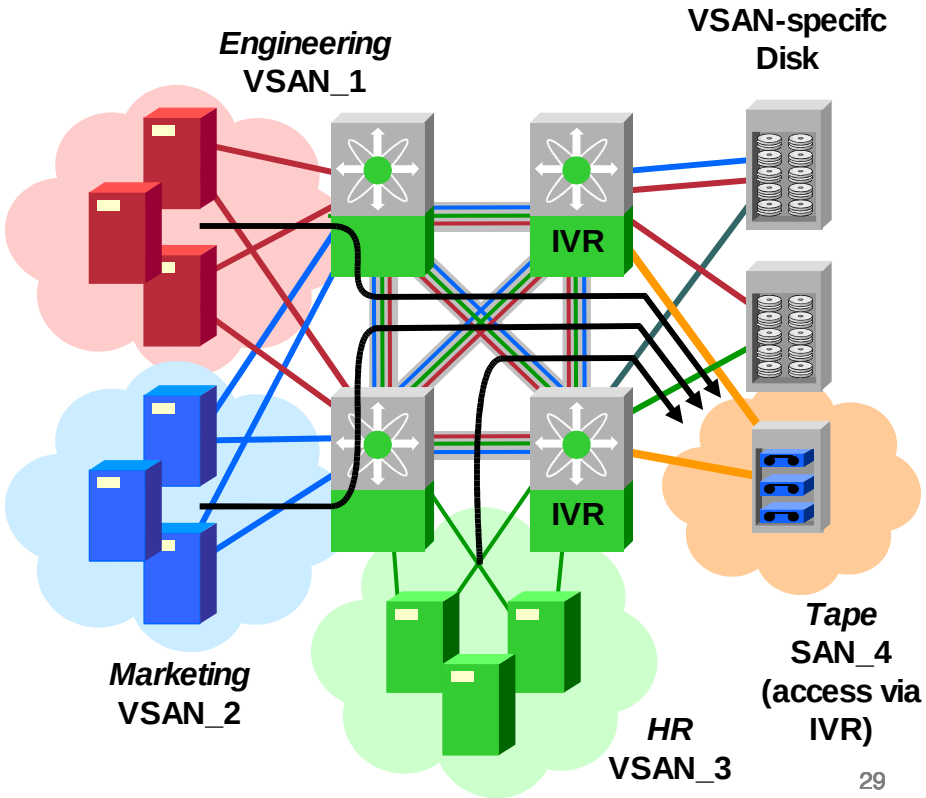



© 2001, Cisco Systems, Inc. All rights reserved.

# Inter-VSAN Routing (IVR): Resilient SAN Extension Solutions

Cisco.com

- **Minimize the impact of change in fabric services across geographically dispersed sites**
  - **Limit fabric control traffic such as SW-RSCNs and Build/Reconfigure Fabric (BF/RCF) to local VSANs**
  - **Flexible connectivity with the highest availability**
  - **Works with any transport service (FC, SONET, DWDM/CWDM, FCIP)**

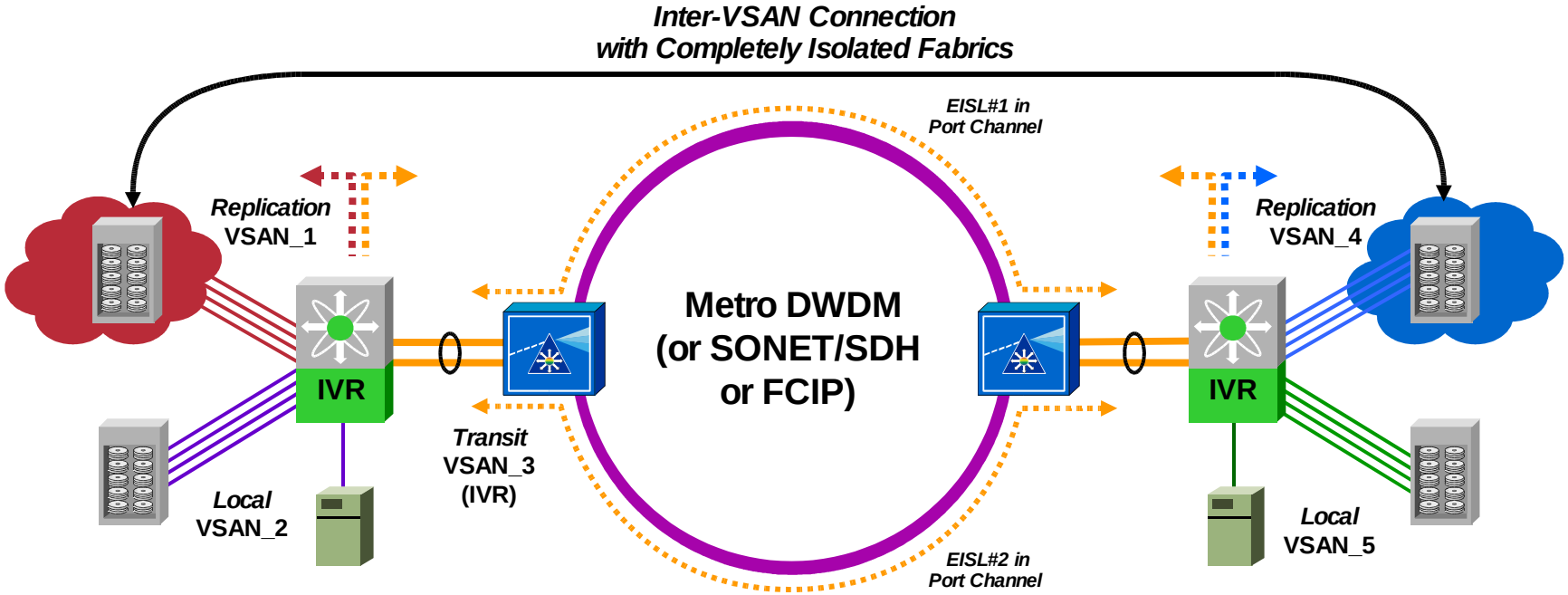



© 2001, Cisco Systems, Inc. All rights reserved.

# Securing the Environment


© 2001, Cisco Systems, Inc. All rights reserved.

# Securing the Virtual Environment

## *What Are We Worried About?*



- Virtual fabrics and fabric routing change the security model
  - Previously isolated environments now are connected together
  - SANs may be extended outside of the data center
  - Multiple administrators possible
- Many solutions available from Cisco
  - Fabric authentication services
  - Fabric encryption services
  - Management access control and roles-based access control

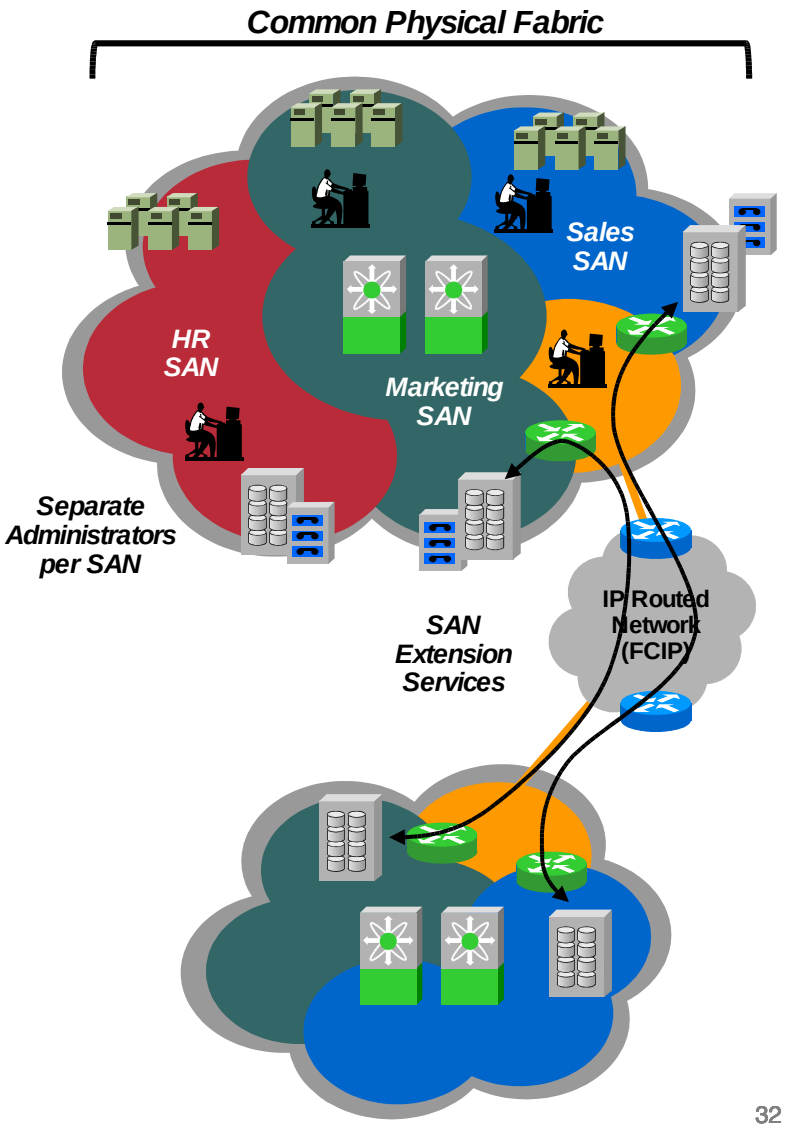



© 2001, Cisco Systems, Inc. All rights reserved.

# WWN-Based VSANs

- Previously each port in MDS 9000 Family belongs to one VSAN only
- Device connected to port belongs to VSAN configured on port
  - Reconfiguration necessary to move device to new port
- New feature added in SAN-OS 2.0 enables WWN-based VSANs
  - Device VSAN membership based on device WWN
  - Can authenticate before assignment
  - If not recognized, can be put in default VSAN or disabled

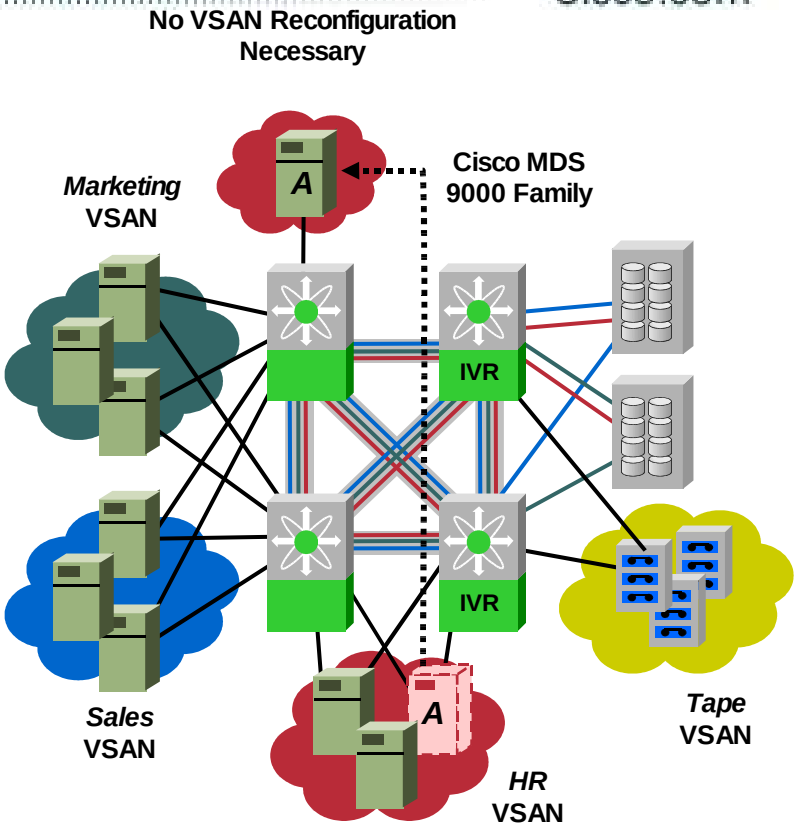


Collapsed Fabric with VSANs


© 2001, Cisco Systems, Inc. All rights reserved.

# Securing the Virtual Environment

## *Fabric Authentication Services*



- Standard exist today to enable authentication of SAN devices
- Supports both FC and iSCSI
  - ANSI T11 - FC-SP for FC
- Supported for both device-to-switch and switch-to-switch in Cisco MDS 9000 family
- Authenticate all ISL connections
  - Ensure who you're connecting to
  - Works also over FCIP connections
- Authenticate host connections
  - Both FC and iSCSI
  - No storage support *yet*

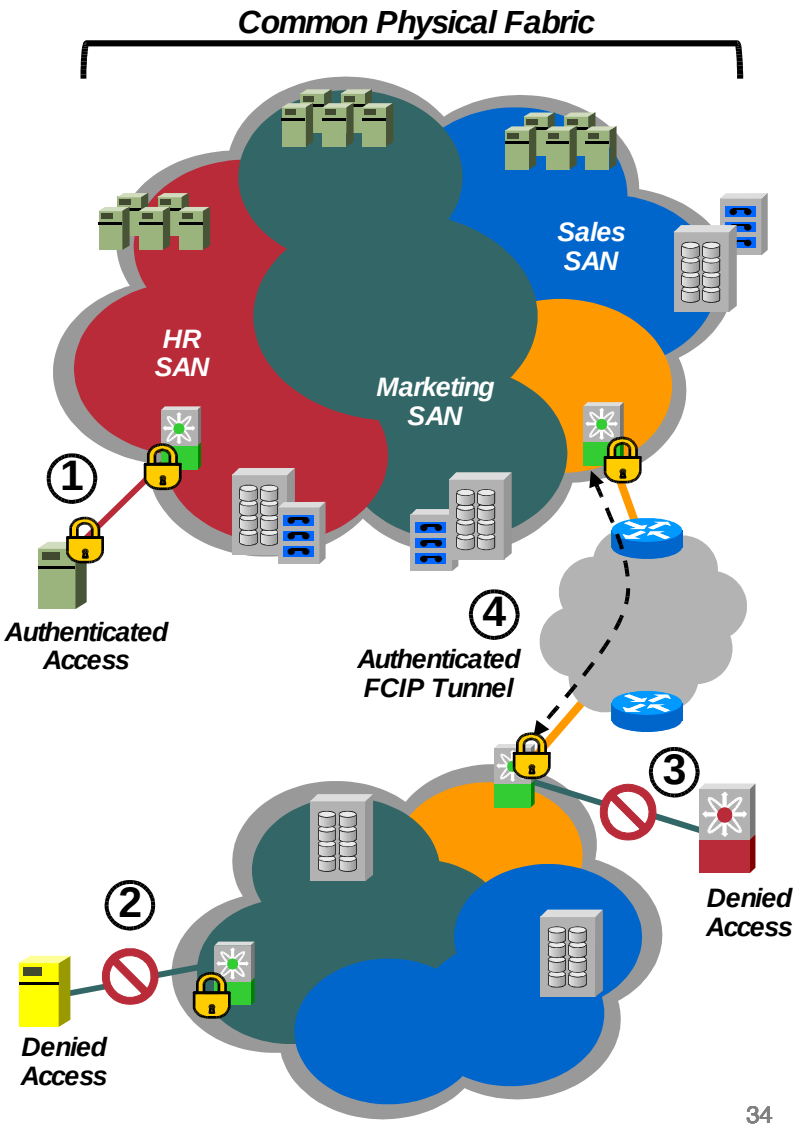



© 2001, Cisco Systems, Inc. All rights reserved.

# Securing the Virtual Environment
## *Fabric Encryption Services*



- Encryption services especially useful when SAN extend outside the data center
- Today available on the Cisco MDS 9000 Family of switches
  - MPS-14/2 Switching module or MDS 9216i fabric switch
  - FCIP Tunnel Encryption
  - iSCSI initiator-to-switch encryption
- Uses standards-based IPSEC services
- Cisco solution is hardware based
  - Introduces only 10us of latency

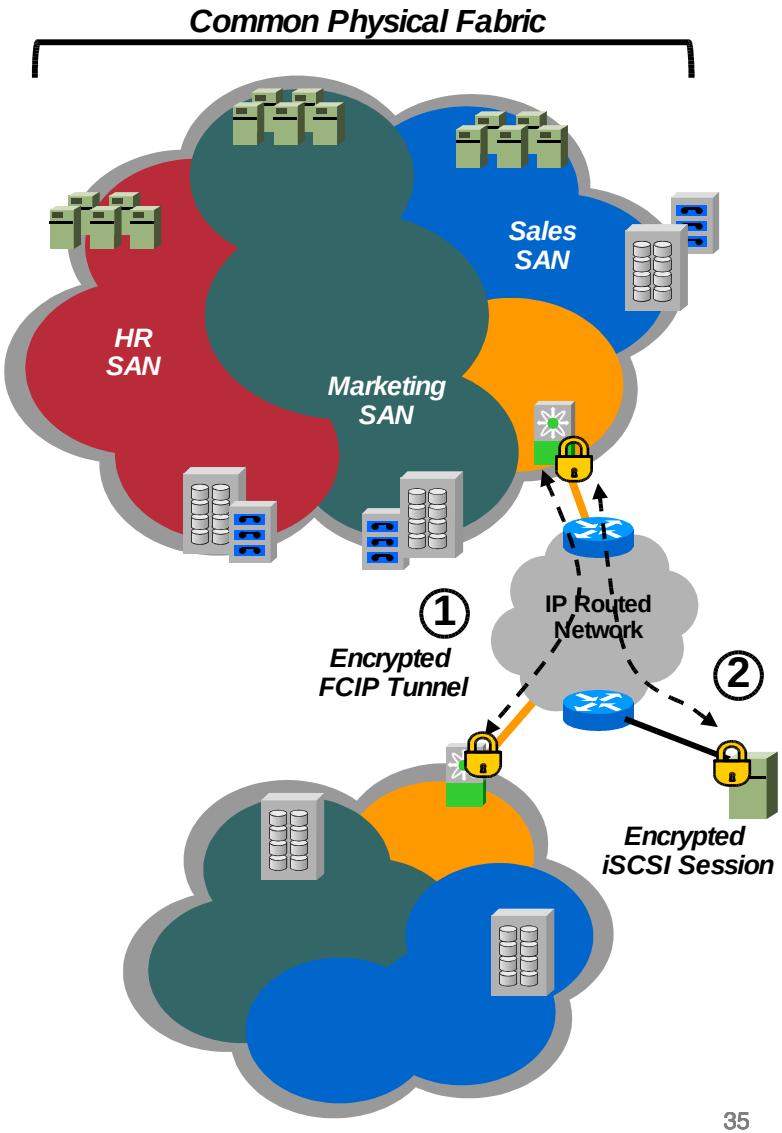



© 2001, Cisco Systems, Inc. All rights reserved.

# Securing the Virtual Environment

## *Fabric Management Services*



- Fully secured access to Cisco MDS 9000 Family of switches
  - Secure Shell (SSH and SFTP)
  - Secure SNMP (SNMPv3)
  - Secure API access (SSL + SMI-S)
- Full RADIUS and TACACS+ support for centralized account control
- Industry's only customizable Roles-Based-Access-Control (RBAC)
  - Defined on a per-VSAN and/or per-command basis (function-specific)

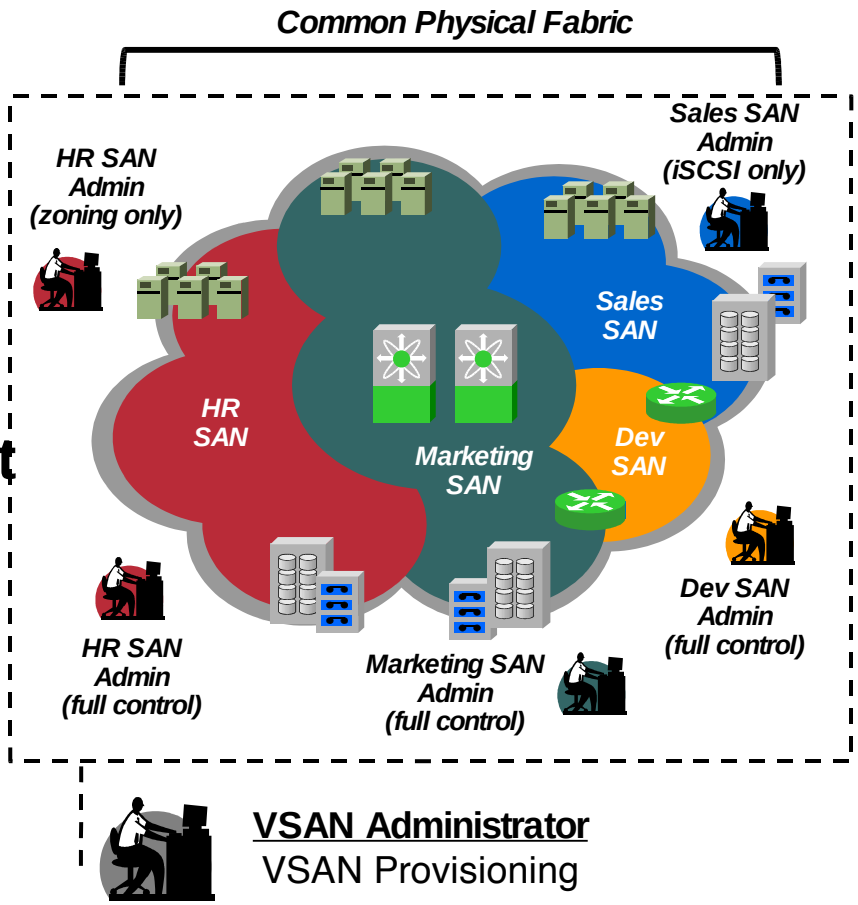



© 2001, Cisco Systems, Inc. All rights reserved.

# Conclusion



- Cisco is the only vendor to offer fully embedded virtual fabrics and fabric routing today
- Full MDS 9000 Family support for VSANs and IVR
- VSANs now form basis of ANSI T11 standard
- Virtual fabrics and fabric routing reduce costs
- Always working on new solutions leveraging Cisco's VSAN technology


© 2001, Cisco Systems, Inc. All rights reserved.

# Presenting the Cisco MDS 9000 Family

Cisco.com

## Industry Leading Investment Protection Across a Comprehensive Product Line

**MDS 9000 Family**

MDS 9120
MDS 9140
Fixed
Fabric Switches

MDS 9216 and 9216i
Modular
Fabric Switches

MDS 9506
Director

MDS 9509
Director

**MDS 9000 Modules**

16 Port
FC

32 Port
FC

14+2 Port
FC+IP Storage

*New*

4, 8 Port
IP Storage

Advanced
Svcs Module

Caching
Svcs Module

**Mgmt**

Cisco Fabric Manager

**OS**

MDS 9000 Family-OS


© 2001, Cisco Systems, Inc. All rights reserved.

CISCO SYSTEMS

EMPOWERING THE
INTERNET GENERATION


© 2002, Cisco Systems, Inc. All rights reserved.