“Torndado Warning”

Tornado 10™
An Advanced High Speed Solid State Data Recorder

Elmer Funderburk
(512)306-1100 x2179
funderburk@spec.com

SPEC

Systems & Processes Engineering Corporation
Current Address: 4310 Westbank Dr., Austin, TX USA 78746-6558
After June 1, 1998: 101 W. 6th St., Austin, TX USA 78701
Voice: (512) 306-1100 x2179 Fax: (512) 327-5487
After June 2, 1998: (512)-479-SPEC
www.spec.com

Outline

- *Corporate Overview*
- *Tornado 10™ Overview*
- *Applications*
- *Memory Configurations*
- *Data Storage Formats*
- *Typical Operation*
- *System Specifications*
- *Tornado 10™ Development Contract*
- *Tornado 10™ Advanced Development Model*
- *Tornado 10™ Production*
- *Pod Body Configuration*
- *Conclusion*

Corporate Overview

- **Founded in 1986**
- **Headquarters in Austin, Texas**
- **Professional Staff of Scientists & Engineers**
- **Capabilities**
  - Systems Engineering
  - Electrical/Mechanical Design
  - ASIC Design
  - Prototype & Test Labs
  - Software Development

SPEC

Systems & Processes Engineering Corporation

Tornado 10™ Overview

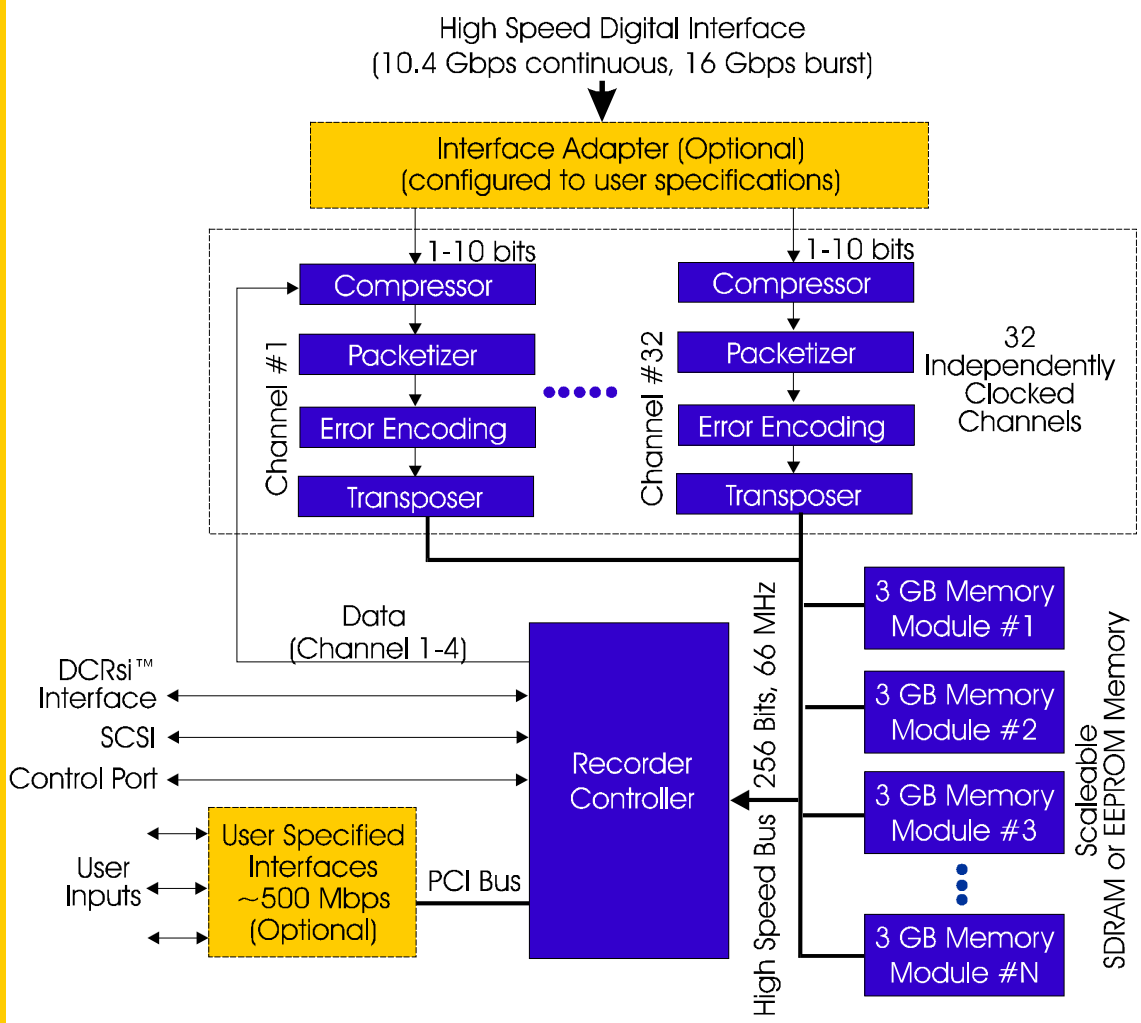

Objective

Develop a programmable, ultra high density recorder to capture and digitally store high speed video and instrumentation data.

Features

- Storage capacity exceeding 150 Gbits
- Input data rates up to 16 GBits/sec
- High speed parallel interface
- Industry standard interfaces (SCSI, DCRSI, RS-422, etc.)
- Electrically compliant internal PCI slots
- CCSDS data formatting
- Data error encoding
- Non-volatile storage
- Lossless compression

SPEC

Systems & Processes Engineering Corporation

Applications

Capture Ultra High Speed Data Sources

- Video (1024 x 1024 pixel x 1000 fps)
- Multiple independent data sources
  - 1 - 32 channels of 1 - 10 bit data at 50 MHz
- Wide Band Radar, Seeker Data

Capture PCI Compatible Data Sources

- SCSI, Fibre Channel, Ethernet, DCRsi™, 1553B
- Custom instrumentation interfaces

Flight Applications

- Size constrained applications (“Small Box” and pod mount)
- Environment-constrained applications (e.g., high ‘g’)

Three Memory Configurations

High Speed Memory

- SDRAM Modules @ 3GBytes Per Module (64Mb SDRAM)
- High Performance, High Capacity

High Speed Memory with Nonvolatile Backup

- SDRAM & EEPROM Modules
- High Performance, Less Capacity
- SDRAM contents transferred to EEPROM after capture

Low Speed Nonvolatile Memory

- EEPROM Modules
- Low Performance, High Capacity

Data Storage Formats

Data stored in user selectable compressed or uncompressed format

Compressed data packets stored in non-sequential order (packets written to memory when complete)

- Maximum storage capacity
- Fast sequential access
- Slower random access (packet search required)

Uncompressed data packets stored in sequential order

- Less storage capacity
- Fast sequential access
- Fast random access

Typical Operation

Capture 10 - 20 s of High Speed Data (e.g. Video)

- Lossless compression 2:1 on average, ~7:1 maximum
- Packetize compressed data
- Store in SDRAM

Data Retrieval

- Controller reads data over 256-Bit Memory Bus
- Controller uncompresses/error corrects/formats data
- Controller transfers formatted data over PCI bus
  - SCSI to tape backup or PC
  - DCRsi™ to tape backup
  - Ethernet to workstation

Tornado 10™ System Specifications

Chassis	ATR Short (Long Option)
Weight (without memory)	18 lbs
Max Memory Modules - 1 ATR Short - 1 ATR Long	 5 modules (15 GB) 9 modules (27 GB)
Memory Module Weight Capacity Memory Type	 5 lbs 3 GB (with 64 Mbit TSOPs) SDRAM or EEPROM
Cooling	Conduction
Environment	Flight
Data Rate High Speed (sustained) High Speed (burst) Low Speed Data/Control	 10.4 Gbps 16 Gbps (32 ch x 10-bit x 50 MHz) 1 Gbps (PCI 32 bit x 33 MHz)

SPEC

Systems & Processes Engineering Corporation

Tornado 10™ Development Contract

Developed system architecture for pod body implementation

- Based on chip scale packaging techniques
- ASIC implementation of special functions

Developed detailed design of pod body architecture in lower risk "small box" format

- FPGAs used instead of ASICS
- Memory in TSOPs vs. chip scale package
- Fulfills a number of recording needs

Performed development risk reduction effort

- Utilized simulation tools to verify design
- Particularly challenging parts of the design were implemented in the Advanced Development Model (ADM)

Tornado 10™ Advance Development Model

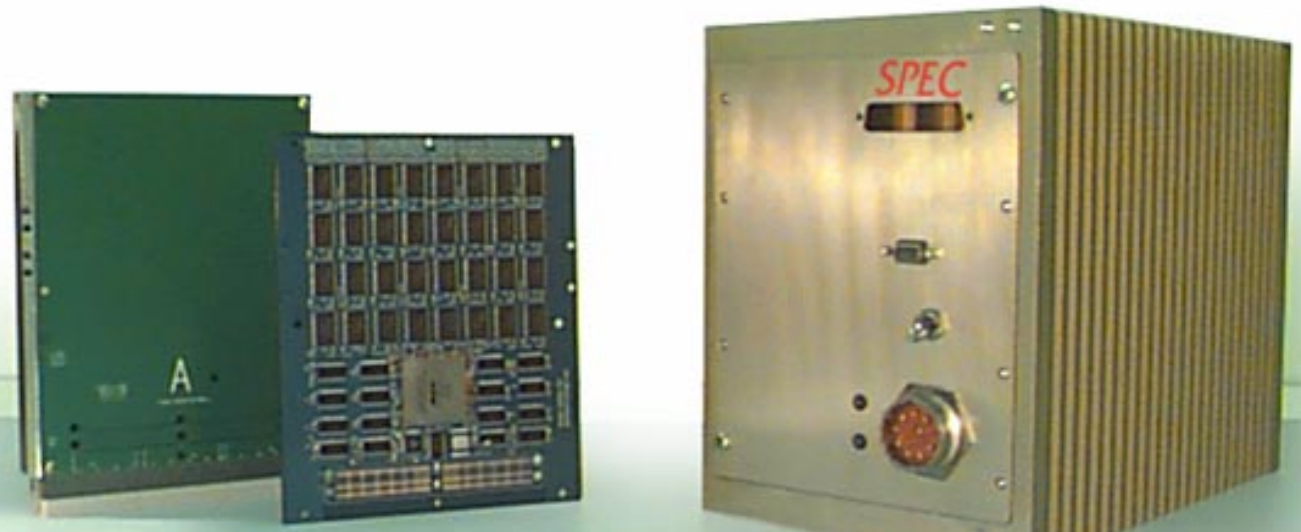

SPEC
Systems & Processes Engineering Corporation

ADM Memory Card

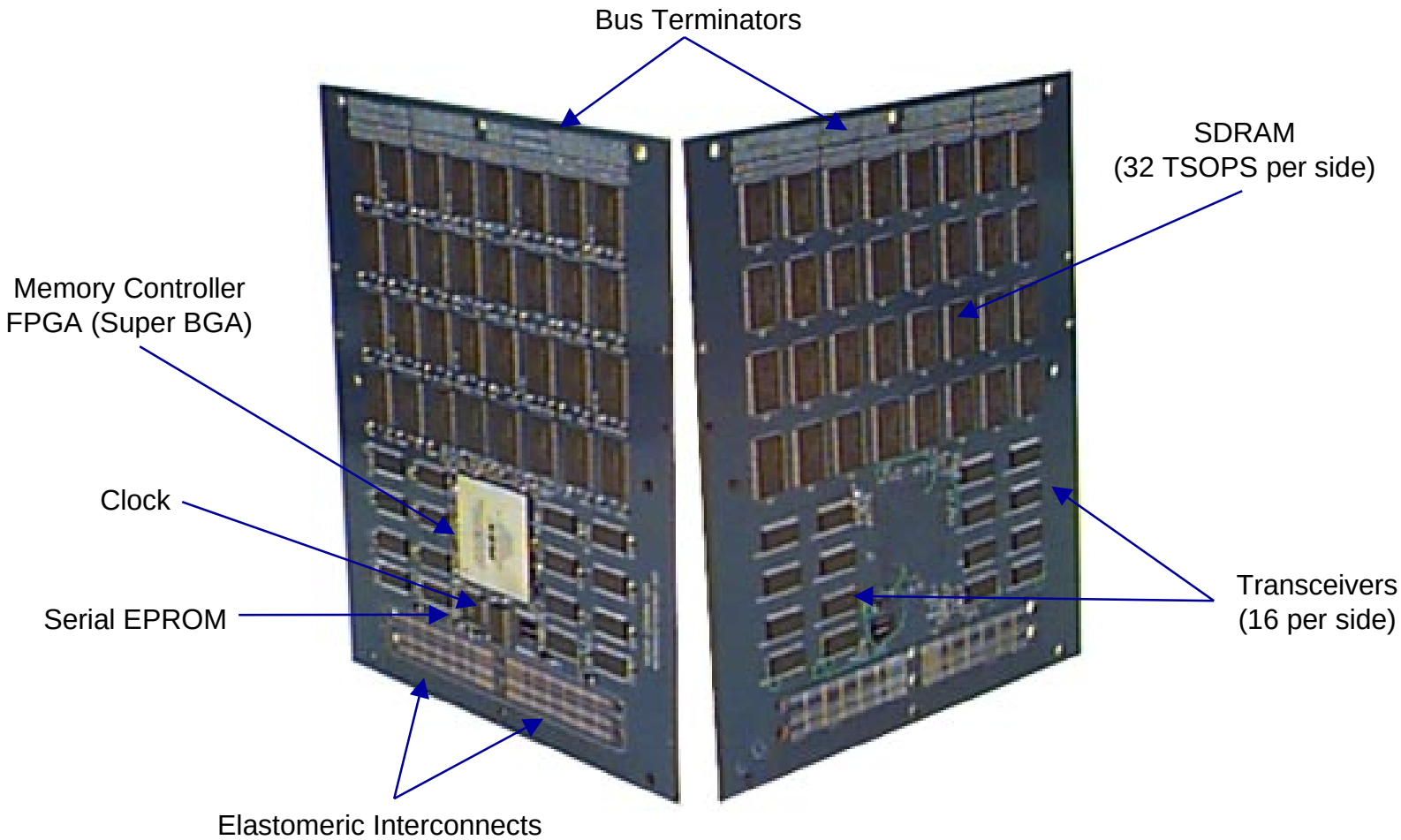

Front Side **Back Side**

SPEC
Systems & Processes Engineering Corporation

Risks Mitigated by ADM

- **Implementation of design in FPGAs**
  - Memory controller functionality verified
  - Memory controller will operate at required speed
- **Extreme Bus™ memory data bus has been proven**
- **Captured data in memory and extracted**
- **Resolved memory card and controller interface issues**
- **DCRsi interface developed**
- **Proven system clock circuit**
- **Thermal management techniques proven**
- **ECPI scheme has been proven**

Tornado 10™ Production

DOD -TTD&D (Test Technology Development & Demonstration Contract)

- Production model
- High speed front end implemented in ASICs
- Memory Module Upgraded from 512 Mbytes to 3 Gbytes
- Faster FPGAs for Memory Module to meet 16 Gb/sec requirement.
- Detail Pod Body Design Study

Pod Body Configuration

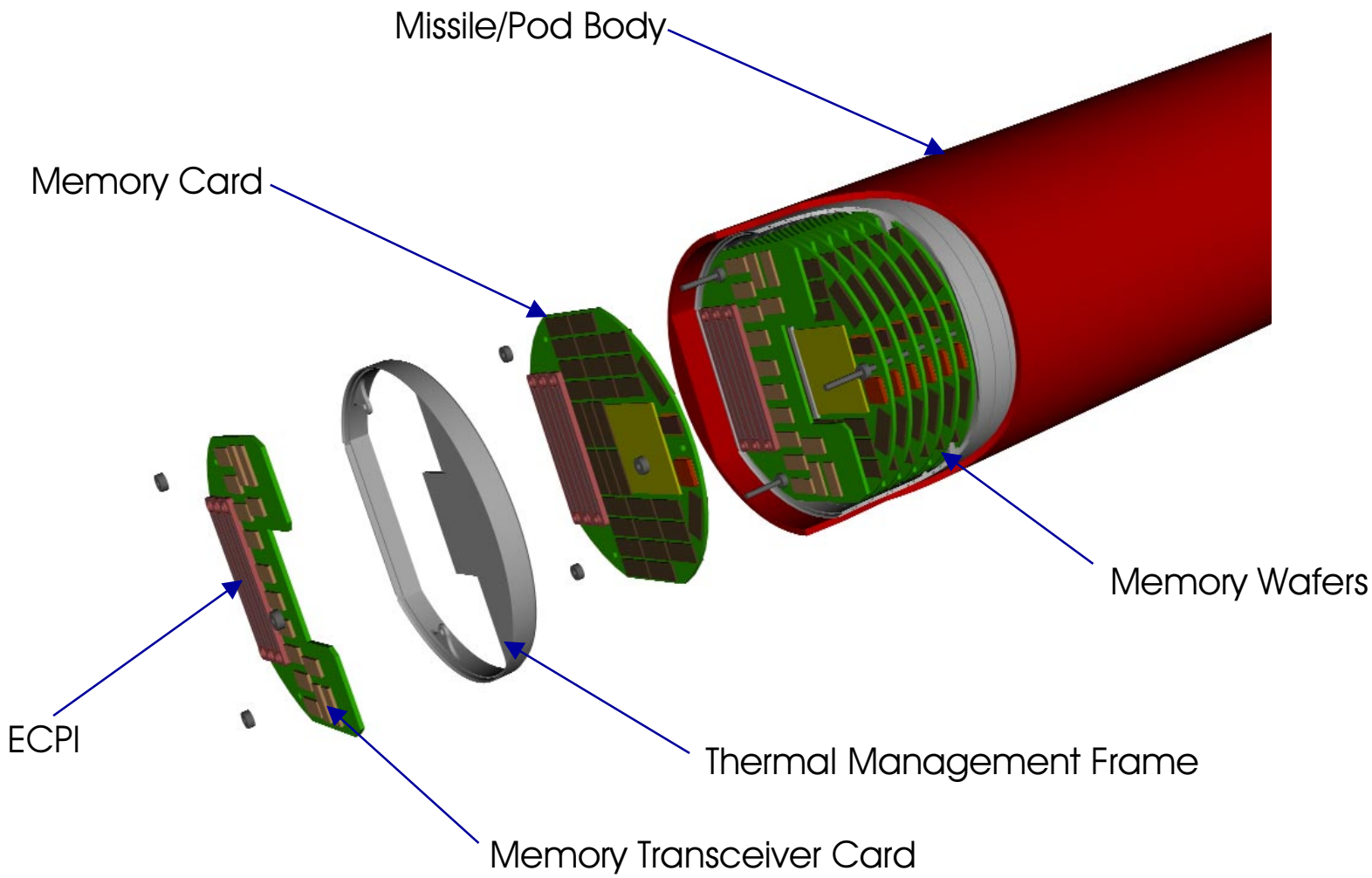

SPEC
Systems & Processes Engineering Corporation

SPEC Integrated Instrumentation System

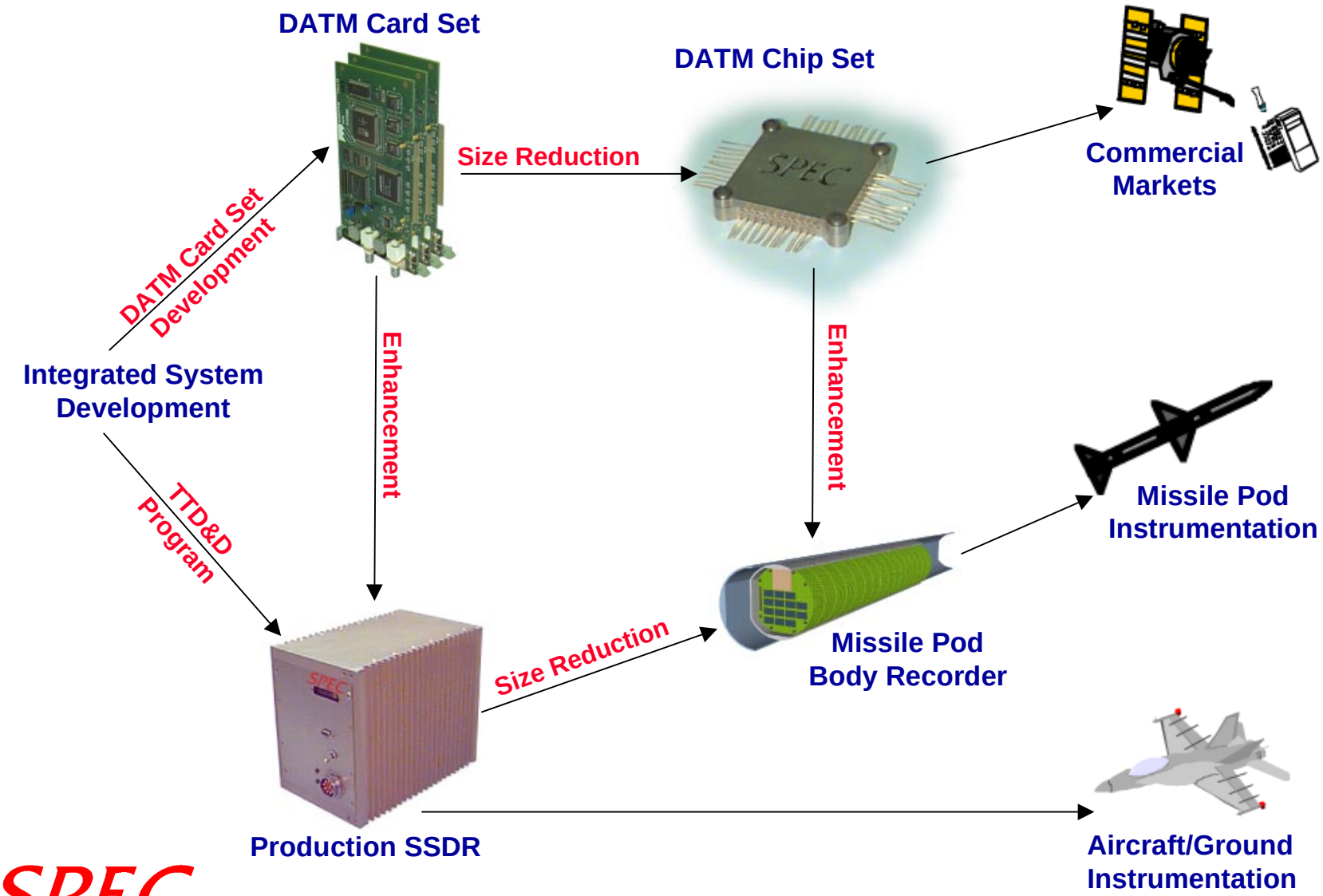

SPEC

Systems & Processes Engineering Corporation

Conclusion

- The SPEC Tornado 10™ meets the need for High Speed, High Density Recording Applications
- "Small Box" Production Model Available 4Q /98
- Miniaturization Path to Pod Body recorder
- SPEC is exploring partnership/licensing options